INSTRUCTION MANUAL

MODEL 855T -3187

California INSTRUMENTS

Invertron® AC POWER EQUIPMENT

An affiliate of Amstar CORPORATION

California Instruments A Division of Amstar Technical Products Company, Inc 5150 Convoy Street San Diego, CA 92111-1266 (619) 279-8620 Telex 695047

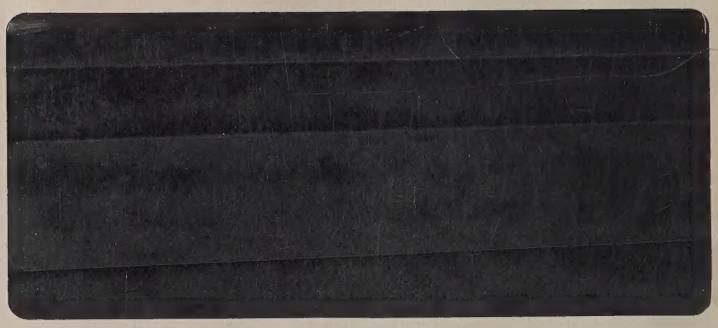

California INSTRUMENTS

Revision E
January 1985

Copyright © 1983, 1984, 1985
by California Instruments.
All rights reserved.

INSTRUCTION MANUAL

MODEL 855T -3187

Invertron®

MANUAL ADDENDUM
855T-3187

1.0 GENERAL

The Model 855T-3187 Oscillator is similar to the standard Model 855T-1 Oscillator except the unit has been modified to provide a high stability output.

A high stability reference for A1U10 has been added.

2.0 SPECIFICATIONS

All specifications of the 855T-3187 are identical to the standard Model 855T Oscillator except for the following:

DISTORTION:	Less than 0.15% at 5 KHz.
AMPLITUDE STABILITY:	
*Amplitude vs. load:	±0.01% from no load to full load.
*Amplitude vs. line:	±0.01% from 103.5 VAC to 126.5 VAC line voltage.
*Amplitude vs. time:	±0.01% per week under constant conditions.
	±0.04% per 1000 hours under constant conditions.
*Amplitude vs. Temperature:	±0.01% per degree C average from 15 to 40 degrees C.

3.0 THEORY OF OPERATION

The theory of operation of the Model 855T-3187 is similar to the standard Model 855T Oscillator.

4.0 CALIBRATION

The calibration procedure for the 855T-3187 is identical to the standard Model 855T Precision Oscillator.

NOTE

Set output to 5 KHz.

5.0 DOCUMENTATION

Refer to 4855-410-1 Modification parts list.

* Must be used with the Model 101T-3183 AC Power Source.

Digitized by the Internet Archive
in 2025

https://archive.org/details/manualsplus_05541

TABLE OF CONTENTS

SECTION I—DESCRIPTION

Para. Page

1.1 Introduction 1-1
1.2 Model Number Description 1-1
1.3 General Description 1-1
1.4 Accessory Equipment 1-2
1.5 Specifications 1-2

SECTION II—DESCRIPTION

Para. Page

2.1 Unpacking 2-1
2.2 Power Requirements 2-1
2.3 Fuse Requirements 2-1
2.4 Acceptance Test Procedure 2-1
2.4.1 Model 850T Single-Phase Oscillators 2-1
2.4.2 Model 850T Two-Phase Oscillators 2-1
2.4.3 Model 850T Three-Phase Oscillators 2-1
2.4.4 Model 855T Single-Phase Oscillators 2-1
2.4.5 Model 855T Two-Phase Oscillators 2-1
2.4.6 Model 855T Three-Phase Oscillators 2-1
2.5 Mechanical Installation and Wiring 2-2
2.6 Operating Controls 2-2

SECTION III

Para. Page

3.1 General 3-1
3.2 Functional Description 3-1
3.2.1 Phase A Generator 3-1
3.2.1.1 Basic Oscillator 3-1
3.2.1.2 Multi-Phase Output Generator 3-2
3.3 Detailed Circuit Description 3-3
3.3.1 Phase A Generator 3-3
3.3.1.1 Crystal Oscillator 3-3
3.3.1.2 Rate Multipliers 3-3
3.3.1.3 Range Selection 3-4
3.3.1.4 Address and Direction Control Counter 3-4
3.3.1.5 Quasi-Sinusoid Generation 3-4
3.3.1.6 Frequency Limiter 3-5
3.3.1.7 Power Supplies 3-5

Para. Page

3.3.2 Multi-Phase Converter 3-5
3.3.2.1 C Phase Generator 3-6
3.3.2.2 B Phase Generator 3-6

SECTION IV—ADJUSTMENT PROCEDURES

4.1 General 4-1
4.2 Procedure 4-1
4.2.1 Single Phase Models 4-1
4.2.1.1 Distortion 4-1
4.2.2 Two-Phase Models 4-1
4.2.2.1 Distortion 4-2
4.2.2.2 Amplitude Adjustment 4-2
4.2.3 Three-Phase Models 4-2
4.2.3.1 Distortion 4-2
4.2.3.2 Phase Adjustment 4-2
4.2.3.3 Amplitude Adjustment 4-2
4.2.4 Frequency Limit Adjustment 4-2
4.2.4.1 850T Adjustment 4-2
4.2.4.1 855T Adjustment 4-3

SECTION V—MAINTENANCE

Para. Page

5.1 General 5-1
5.2 Required Test Equipment 5-1
5.3 Test Procedure 5-1
5.3.1 Power Supply Test 5-1
5.3.2 Clock Generator Test 5-1

SECTION VI—DIAGRAMS

Para. Page

6.1 General 6-1

SECTION VII—PARTS LISTS

Para. Page

7.1 General 7-1

SECTION VIII — OPTIONS

8.1 General 8.1

LIST OF ILLUSTRATIONS

Title — Page

Figure 3-1. Block Diagram, ϕA Generator (Main Board) 3-1
Figure 3-2. Block Diagram, Multi-Phase Generator Board 3-3
Figure 3-3. Three Phase Vector Diagram 3-6
Figure 4-1. Test Circuit for 850T/855T Series Oscillators 4-1
Figure 4-2. Location of Frequency Programming DIP Switches, Model 855T 4-3
Figure 5-1. Troubleshooting Chart, Clock Generator 5-2
Figure 5-2. Troubleshooting Chart, Clock Generator 5-3
Figure 6-1. Assembly Diagram, Model 850T Oscillator 6-2
Figure 6-2. Assembly Diagram, Model 855T Oscillator 6-3
Figure 6-3. Assembly Diagram, Model 850T Main Board, A1 6-4
Figure 6-4. Schematic Diagram, Main Board, A1 ..... 6-5/6
Figure 6-5. Assembly Diagram, Model 855T Main Board, A1 6-7
Figure 6-6. Assembly Diagram, Phase Board, A2 6-8
Figure 6-7. Schematic Diagram, Phase Board, A2 6-9

LIST OF TABLES

Title — Page

Table 1-1. Specifications 1-3
Table 2-1. Input/Output Connections 2-2
Table 4-1. Model 855T Frequency Programming 4-3
Table 5-1. Required Test Equipment 5-1
Table 5-2. Power Supply Voltage Limits 5-1

SECTION I—DESCRIPTION

1.1 INTRODUCTION

This instruction manual contains information relative to the installation, operation, calibration and maintenance of California Instruments 850T/855T Series Precision Oscillators. A detailed theory of operation is provided as an aid for maintenance personnel. A complete parts listing, schematic and component location diagrams are also supplied.

1.2 MODEL NUMBER DESCRIPTION

All oscillators in the 850T/855T Series have a five place model number which describes the oscillator series and the number of output phases. In addition, a "D" is placed after the model number if the oscillator is to be used in the three-phase, open delta configuration. The following examples illustrate this numbering system.

Example 1: 850T-1.

This is a variable frequency oscillator with single phase output.

Example 2: 850T-3D

This is a variable frequency oscillator with two-phase 60° open delta output (Phase C leading Phase A).

Example 3: 855T-2.

This is a fixed frequency oscillator with two-phase outputs, 90° displaced. (Phase C leading Phase A).

Example 4: 855T-3.

This oscillator is fixed frequency with three-phase wye output connections.

NOTE

Although the 855T is designated as a fixed frequency oscillator and will be set to the customer specified frequency, internal switches permit reprogramming the oscillator frequency.

1.3 GENERAL DESCRIPTION

California Instruments' 850T Series variable frequency oscillators and 855T Series fixed frequency oscillators are designed to plug into and derive their power from any of the Invertron® AC Power Sources. The output of the oscillator then provides the input frequency and amplitude drive for the Power Source. They employ digital logic techniques for frequency generation with a crystal controlled oscillator serving as the reference for the digital logic circuits. This technique provides long term frequency stability not obtainable with analog circuits. The 850T Series has three frequency ranges selected with a front panel switch. There are four frequency selection controls, permitting precise adjustment of the output frequency with resolution of one part in ten-thousand. Frequency is adjustable in 0.01 Hz steps from 0.01 Hz to 99.99 Hz in the X1 range, in 0.1 Hz steps from 0.1 to 999.9 Hz in the X10 range and in 1 Hz steps from 1 to 9999 Hz in the X100 range. By setting the internal switches and making other minor internal changes to the 855T, its output frequency may be similarly adjusted to any frequency selectable in 1 Hz steps.

The crystal oscillator reference has an average frequency stability of five parts per million per degree Centigrade. Thus, with the frequency having been set at room temperature, the maximum variation would be approximately 125 parts per million (0.0125%) over the 0 to 55°C range. The oscillator frequency is divided by digital logic circuits to the selected output frequency and then filtered to remove harmonic components.

The 850T/855T Series Oscillators will shut down if the frequency is outside of factory set limits. This prevents selection of a frequency outside the operating limits of the associated power source, in the case of the 850T, and protects against a malfunction of the oscillator circuits that would produce a frequency outside these limits.

The 850T/855T Series Oscillators are equipped with a "soft start" feature that slowly increases the output amplitude from zero to the set level whenever the

unit is first turned on. The 850T also "soft starts" when resuming operation after automatic shutdown caused by selection of an out-of-limit frequency.

Both the 850T and 855T Oscillators may be equipped with optional circuit boards to provide two- or three-phase outputs. Additionally, the output phases may be set to any 30 degree increment relative to the reference phase. Because of the digital techniques employed, the electrical angle between phases remains constant irrespective of frequency.

1.4 ACCESSORY EQUIPMENT

An Extender Assembly, Part No. 4800-703 is available for use with the 850T/855T Series Oscillators, permitting test and adjustment outside of the associated power source.

1-5 SPECIFICATIONS AND PERFORMANCE DATA

Specifications and performance data for the 850T/855T Series Precision Oscillators are listed in Table 1-2. All units are factory tested to these specifications in accordance with California Instruments Division test procedures as detailed in Section V of this manual.

Table 1- Specifications.

FREQUENCY RESOLUTION:	1 part in 10,000
FREQUENCY ACCURACY:	0.005% at 23°C
FREQUENCY STABILITY:	5 ppm per °C. Average Temperature coefficient from 0 to 55°C.
FREQUENCY RESPONSE:	±1% from 45 Hz to 1 KHz. ±2% from 45 Hz to 5 Khz. ±3% from 45 Hz to 10 KHz.
AMPLITUDE STABILITY:	±0.1% for 24 Hrs at 23°C.
AMPLITUDE TEMPERATURE COEFFICENT:	0.02% per °C Average temperature coefficient from 0 to 55°C.
TOTAL HARMONIC DISTORTION:	0.3% max. on 855T and on X100 range of 850T. 0.15% on other ranges at full output.
PHASE ACCURACY:	
Two Phase:	90° 1° from 45 Hz to 5 KHz. 90° 2° from 5 Khz to 10 KHz. (Phase C leading Phase A)
Three Phase Delta:	60° 1° from 45 Hz to 5 KHz. 60° 2° from 5 KHz to 10 KHz. (Phase C leading Phase A).
Three Phase Wye:	120° 1° from 45 Hz to 5 KHz. 120° 2° from 5 Khz to 10 KHz.
GENERAL:	
Size:	Standard Plug-In size for all Invertron® AC Power Supplies.
Input Power:	Available from associated Invertron® AC Power Sources.
Front Panel Finish:	Gray, 26440 per Federal Standard 595 with black silk screened lettering.

CAUTION

Voltages up to 500 Volts AC are available in certain associated Invertrons®. This equipment generates potentially lethal voltages.

DEATH

on contact may result if personnel fail to observe safety precautions. Do not touch electronic circuits when power is applied. Avoid contact with connector pins C and D of the plug-in oscillator, the primary power circuits and output circuits of the associated Invertron® if oscillator is tested and/or adjusted with Invertron®.

SECTION II
INSTALLATION AND OPERATION

2.1 UNPACKING

Individual oscillators are shipped in cardboard containers with protective inner packing. Do not destroy this packing container until the unit has been inspected for possible damage in shipment.

2.2 POWER REQUIREMENTS

The California Instruments 850T/855T Series Precision Oscillators operate from +25 volts DC and −25 volts DC at 0.040 amperes. In addition, 115 volts AC at 10 volt-amperes is required. These power inputs are normally obtained from an associated Invertron® power source.

2.3 FUSE REQUIREMENTS

Separate fusing of the power sources for the California Instruments 850T/855T Series Oscillators is not required.

2.4 ACCEPTANCE TEST PROCEDURE

Inspect the unit for any possible shipping damage immediately on receipt. If damage is evident, notify carrier. **DO NOT return an instrument to the factory without prior approval.** If the unit appears to be in good condition, perform the following:

Mount the oscillator in the appropriate rack housing or, otherwise, apply +25 volts DC, −25 volts DC and 115 volts AC to the unit.

2.4.1 MODEL 850T SINGLE-PHASE OSCILLATORS

The output of a single-phase oscillator should be variable from 0 to 5.000 volts measured between pins 2 and 8 (ground) of connector J2. There is no upper level adjustment. Frequency should be variable in 0.01 Hz steps from 0.01 Hz to 99.99 Hz with the RANGE switch in the X1 position, in 0.1 Hz steps from 0.1 to 999.9 Hz with the switch in the X10 position and in 1 Hz steps from 1 to 9999 Hz with the switch in the X100 position. When monitored with an oscilloscope, distortion should not be visible. Detailed test procedures are provided in the TEST PROCEDURE section of this manual. They should be consulted if further evaluation of the oscillator is required at this time.

2.4.2 MODEL 850T TWO-PHASE OSCILLATORS

The details of paragraph 2.4.1 apply to the reference phase of these oscillators. The phase C (ϕC) output, measured between pins 8 and 9 of J2, should have the same amplitude as the ϕA output (± 0.05 volts) at any position of the front panel amplitude control. When monitored with an oscilloscope, distortion should not be visible on any phase. Detailed test procedures are provided in Section IV of this manual. They should be consulted if further evaluation of the oscillator is required at this time.

2.4.3 MODEL 850T THREE-PHASE OSCILLATORS

The details of paragraph 2.4.1 apply to the reference phase of these oscillators. The phase B (ϕB) output, measured between pins 7 and 8 of J2, and the phase C (ϕC) output, measured between pins 8 and 9 of J2, should have the same amplitude (± 0.05 volts) as the A output at any position of the front panel amplitude control. When monitored with an oscilloscope, distortion should not be visible on any phase. When monitored with a phase meter, the angle between the ϕB and ϕC outputs should be 120°. Detailed test procedures are provided in Section IV of this manual. They should be consulted if further evaluation of the oscillator is required at this time.

2.4.4 MODEL 855T SINGLE-PHASE OSCILLATORS

The details of paragraph 2.4.1 apply to these oscillators except that the frequency is fixed at that indicated in the manual addendum.

2.4.5 MODEL 855T TWO-PHASE OSCILLATORS

The details of paragraph 2.4.2 apply to these oscillators except that the frequency is fixed at that indicated in the manual addendum.

2.4.6 MODEL 855T THREE PHASE OSCILLATORS

The details of paragraph 2.4.3 apply to these oscillators except that the frequency is fixed at that indicated in the manual addendum.

2.5 MECHANICAL INSTALLATION AND WIRING

The 850T/855T Series Oscillators fit directly into the California Instruments Solid State Invertron® Series of power amplifiers. All power for the oscillator, as well as signal output(s) is coupled through the printed circuit connector at the rear of the oscillator. Table 2-1 lists the voltages and applicable connector pins.

Table 2-1. Input/Output Connections.

PIN	FUNCTION
1	Phase A Output signal low
2	Phase A Output signal high
3	Power ground
4	+25 volt input
5	−25 volt input
6	Phase B signal output low
7	Phase B signal output high
8	Phase C signal output low
9	Phase C signal output high
10	External sync input
C	115 volts AC line high
D	115 volts AC line low

The single phase versions of the 850T and 855T Series Oscillators have only a ϕA output. The two-phase (multiphase) versions have ϕA and ϕC outputs while the three-phase verisons have ϕA, ϕB and ϕC outputs.

The oscillators require 115 volts AC, which is rectified, filtered and regulated to 5 volts DC for powering the digital circuitry.

2.6 OPERATING CONTROLS

The 850T Series oscillators have four frequency selector dials on the front panel with which each digit of the output frequency is individually selected. An AMPLITUDE control varies the output level of all signal outputs from 0 to 5.0 volts. The 855T Series oscillators, being fixed frequency, have only the AMPLITUDE control on the front panel.

The output signals of the multi-phase and three-phase versions of both the 850T and 855T are factory adjusted for equal amplitude of all three phases. The GAIN control on each power amplifier of a multi-phase or three-phase system is used as a trim control to adjust each of the output leg voltages so that they are precisely equal to each other.

CAUTION

REMOVE POWER FROM THE SOLID STATE INVERTRON® BEFORE REMOVING OR INSERTING THE PLUG-IN OSCILLATOR.

SECTION III
THEORY OF OPERATION

3.1 GENERAL

The California Instruments 850T/855T Series Precision Oscillators, because they are controlled by a quartz crystal, provide a degree of frequency stability that surpasses, by an order of magnitude, that which is obtainable with analog types. Amplitude stability is also improved since the operating frequency is determined by digital logic circuits. Therefore, the basic "oscillator" is not frequency or temperature sensitive. Output amplitude stability will be affected mainly by frequency and temperature as they affect output amplifiers. Such affects are minimal. The optional multi-phase outputs of this series are developed through a single phase to multi-phase converter.

3.2 FUNCTIONAL DESCRIPTION

The functional descriptions of this section describe the circuitry of the Model 850T oscillator. The Model 855T operates in exactly the same manner except that the frequency is programmed with internal switches and is not variable at the front panel.

3.2.1 PHASE A GENERATOR

3.2.1.1 BASIC OSCILLATOR

The following paragraphs present a functional description of the basic oscillator referenced to the block diagram of Figure 3-1. The crystal oscillator operates at 10.2 MHz. A group of four rate mul-

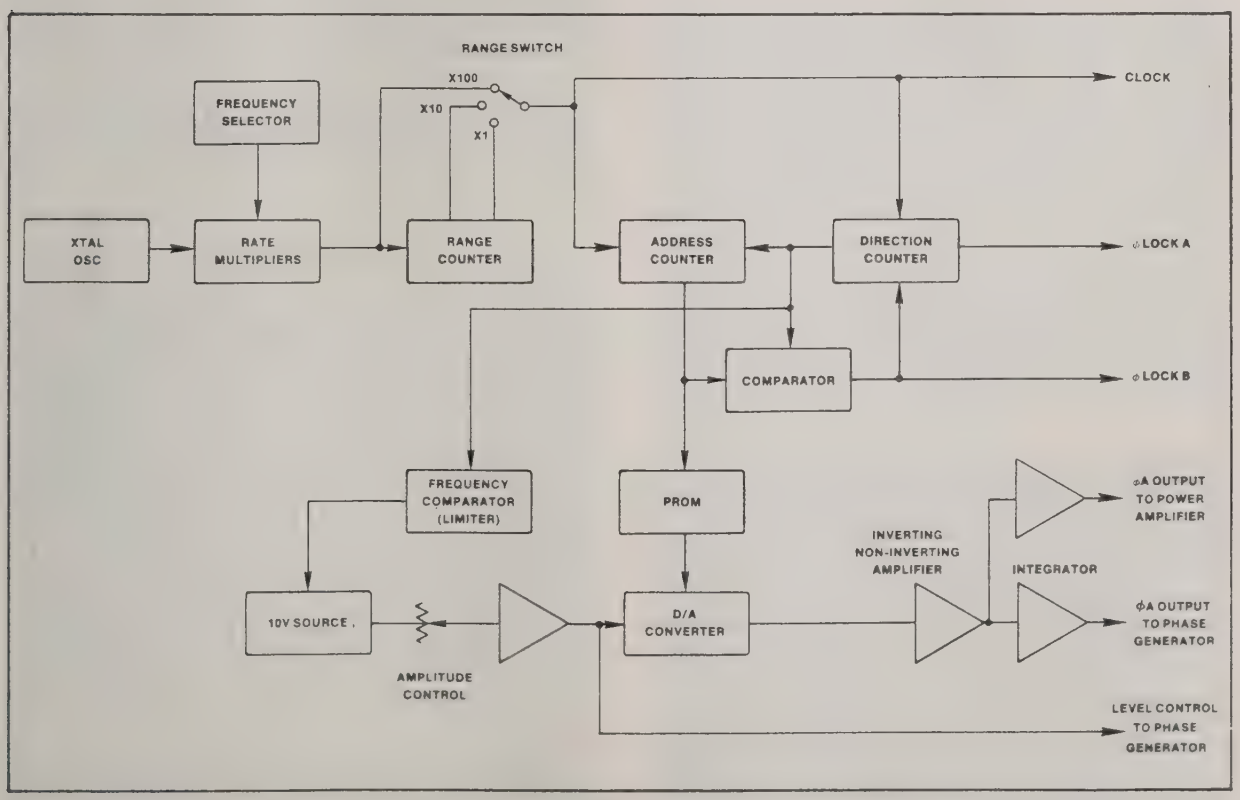

Figure 3-1. Block Diagram, ϕA Generator (Main Board).

tipliers, connected in series, control the number of oscillator pulses that will pass to their output per unit time. That number is dependent on the positions of the four panel rate (frequency) switches to which the rate multipliers are connected. Though not dividers, in the usual sense, the rate multipliers effectively divide the oscillator frequency in accordance with the panel switch settings.

The pulses at the output of the rate multipliers pass to a dual decade counter and the range switch. When the switch is in the X100 position, the rate multiplier output passes through the switch directly to the address counters. When it is in the X10 position, the rate multiplier output is divided by 10 through one half of the dual decade counter before passing to the switch and to the address counters. When it is in the X1 position, it is divided by 100 through both halves of the dual counter before passing to the switch and the address counters. This arrangement permits division of the crystal oscillator by multiplication using factors ranging from 0.001 to 0.9999. The ranges of multiplication, determined by the range switch position, are 0.001 to 0.009999, 0.01 to 0.09999 and 0.1 to 0.9999.

The address counter consists of two binary counters. The four outputs of each counter are connected to inputs of the programmable read-only memory (PROM) which would provide 256 discrete addresses. However, the number of addresses is limited to 255 as the comparator and the direction control counter cause the address counter to change its count mode from up to down at counts 255 and 765 and from down to up at counts 510 and 1020. During each complete cycle, at the output frequency, the counters count up from 000 to 255 for the first 255 clock pulses, count down to 000 during the time of clocks 256 to 510, back to 255 during the time of clocks 511 to 765 and back to 000 during the time of clocks 765 to 1020.

At each of the 255 addresses produced by the address counters, a discrete digital code appears at the output of the PROM and at the input to the digital-to-analog converter (D/A converter). As the address to the PROM progresses from 000 to 255, the PROM output codes cause the output of the D/A converter to increase in 255 steps that describe the first 90 degrees of a sinusoidal waveform. As it progresses from 255 to 000, while the counter is counting down, the second 90 degrees of a sinusoidal waveform are described. The absolute levels at the D/A converter output are determined by the 10 volt reference and the adjustment of the level control.

The waveform at the output of the D/A converter is similar to that of a sinusoidal waveform after full wave rectification except that it is generated in 510 steps (digitally) rather than as an analog signal. To formulate a quasi-sinusoidal waveform, alternate portions of the D/A converter output must be inverted. Alternate clockings of the direction control counter produce a state change at its output that is connected to the inverting/non-inverting amplifier. The state of the counter output determines whether the amplifier will be in its inverting or non-inverting mode. Since the counter output changes state at the end of each half-cycle, alternate half-cycles of the D/A converter output are inverted and the output of the amplifier is a quasi-sinusoidal waveform which is filtered by the integrating amplifier to produce a sinusoidal waveform with very low distortion.

The frequency limiter serves to prevent an output from the oscillator if the selected frequency is outside of the range of the associated power source driven by the 850T. The frequency limits are factory adjusted. The limiter consists of two timers. One limits the upper frequency and the other the lower frequency. The signal that clocks the direction control counter also triggers both sections of the frequency limiter, once for each output cycle. If the frequency is too low, one timer will have timed out before the next trigger pulse occurs. This is sensed and disables the 10 volt reference for the D/A converter, thus shutting off the output. If the frequency is too high, the second timer will not have timed out before the next tigger pulse. This, too, is sensed and also disables the 10 volt reference.

3.2.1.2 MULTI-PHASE OUTPUT GENERATOR

The reference phase, phase A (ϕA), is generated by the basic oscillator described functionally in the preceding paragraphs. Phases B and C (ϕB and ϕC) are generated on an optional second circuit board. The circuits of that board are shown in block diagram form in Figure 3-2. Note that there are similarities between Figures 3-1 and 3-2 in the counter-PROM-D/A converter areas. The address counters are clocked in the same manner as those of the basic oscillator. However, they are preset coincident with the zero degree point of the reference phase, ϕA, to a number corresponding to the difference between the reference phase and the desired angle of Phase C (ϕC). In the standard unit, this will be the equivalent of 120 degrees leading ϕA. The address counters, direction control counter, PROM, D/A converter and inverting/non-inverting amplifier operate in the same manner as those of the basic oscillator. The

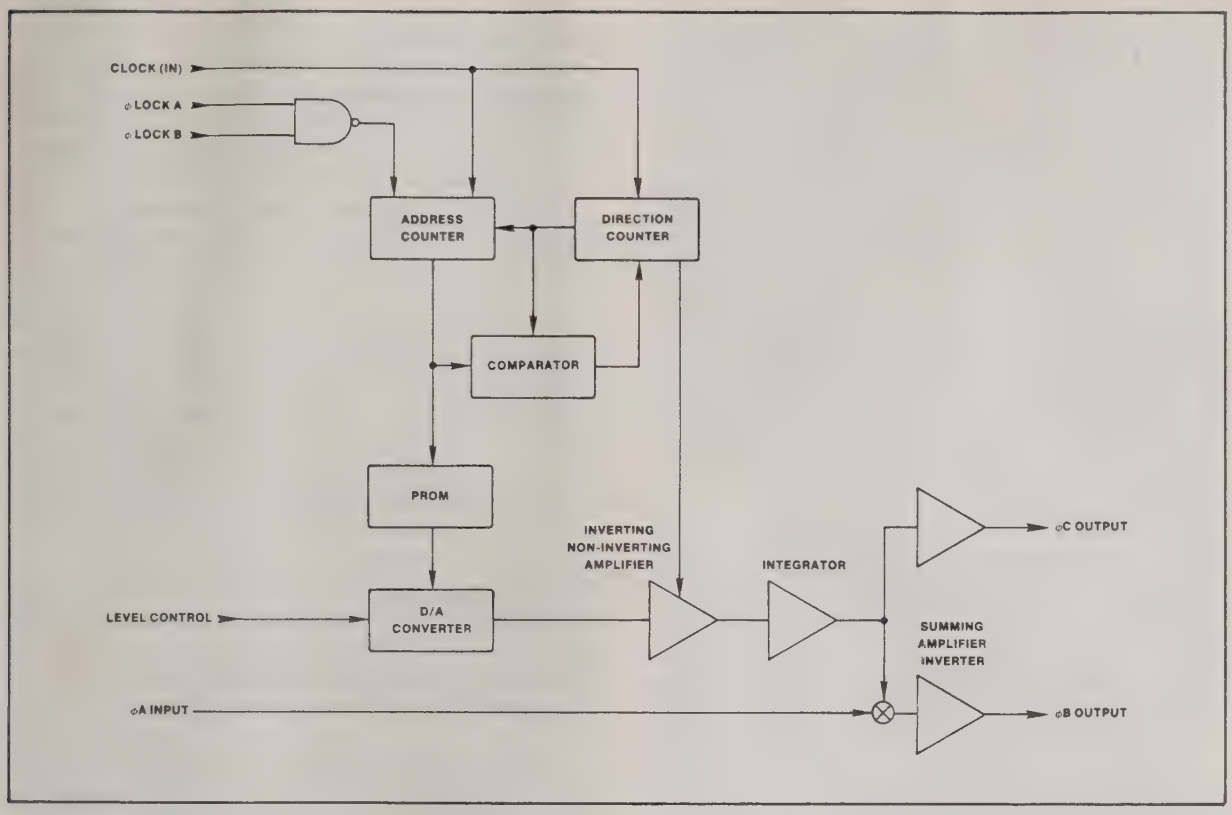

Figure 3-2. Block Diagram, Multi-Phase Generator Board.

output of the ϕC inverting/non-inverting amplifier is combined with the ϕA output in the phase B (ϕB) generator to create the ϕB output.

3.3 DETAILED CIRCUIT DESCRIPTION

The paragraphs of this section describe in detail the operation of the circuits of the Model 850T Precision Oscillator. Unless otherwise specified, all text within this section is referenced to the schematic diagrams of Figures 6-4 and 6-7. Where components consist of several discrete circuits within a single package, the individual circuits are identified in the text by the basic component identifier followed by a hyphen and the output pin number. For example, the buffer in U7 that has its output connected to pin 8 is identified as U7-8. If this device is located on circuit board A1, its complete identifier is A1U7-8. However, the prefix is used in the following paragraphs only when necessary to avoid confusion in identifying similarly numbered components located on different boards.

3.3.1 PHASE A GENERATOR

3.3.1.1 CRYSTAL OSCILLATOR

Refer to Figure 6-3. Crystal Y1, FET Q3 and associated components comprise an oscillator operating at 10.2 MHz. The oscillator output is bufferd by U7-8 and U7-10 which also convert the oscillator output to a series of TTL compatible pulses.

3.3.1.2 RATE MULTIPLIERS

A complete explanation of the operation of rate multipliers may be found in material published by the device manufacturer. Therefore, the explanation of the rate multiplier circuits herein is limited to that which is peculiar to this design.

A rate multiplier may block pulses appearing at its input from reaching its output or it may pass from one to nine pulses for every ten input pulses, depending on the states of its control inputs. In the 850T Series variable frequency oscillators, the control inputs of the rate multipliers, U1, U2, U3 and U4, are connected to the frequency control switches, S3, S4, S5 and S6. (In the fixed frequency models, they are connected to switches S1 and S2). Rate multiplier U1, for the most significant digit (MSD), is enabled at all times. From 0 to 9 pulses will appear at its output, pin 5, during the time of the first nine of each group of ten oscillator pulses. The actual num-

ber will depend on the setting of the frequency control switch, S6. During the time of the tenth oscillator pulse, its enable output, pin 7, goes low, enabling the next rate multiplier, U3. U3 counts the enable input pulses in the same manner that U1 counted the oscillator pulses. The number that pass to its output will be dependent on the setting of switch S5. However, the output pulse will have the timing and duration of the clock oscillator pulse because it is an input to each rate multiplier. This provides synchronization and uniformity of the pulses at the outputs of the mulitipliers. U4 counts the enabling outputs of U3 and U2 counts those from U4. The output pulses from the rate multipliers are then summed through NAND gate U8-8.

3.3.1.3 RANGE SELECTOR

The range selector circuit consists of dual decade counter U11 and selector switch S7. (S7 is installed only in variable frequency models). When S7 is in the X100 position, the pulses at the output of U8-8 pass directly to the address counters, U13 and U18, and to directional control counter U14. When S7 is in the X10 position, the pulses at the output of U8-8 are divided by a factor of ten in one-half of U11. When it is in the X1 position, they are divided by a factor of 100 through both sections of U11.

3.3.1.4 ADDRESS AND DIRECTION CONTROL COUNTERS

The address counters, U13 and U18, are so called since they produce the address for the two programmable memories (PROM's) U17 and U19. They are binary counters that are synchronously clocked by the output of U8-8 or by one of the outputs of U11, depending on the position of S7. However, U18 is enabled by the output of U13 only between the rising edges of the 15th and 16th clock pulses and will be clocked by the rising edge of the 16th pulse. Therefore, U13 must be clocked sixteen times for U18 to be clocked once, thirty-two times for it be clocked twice, etc. The four stage outputs of U13 and U18 are connected to the eight inputs of U17 and U19 providing 256 discrete memory addresses.

The array of exclusive NOR gates, U20 and U22, are open-collector types and their combined outputs go high, producing ϕLOCK B, when all its inputs are the same, high or low. ϕLOCK B occurs when U14-14 (Q0) is high and all stage outputs of U13 and U18 are high, except U13-14 (Q0), at counts 254 and 764. It also occurs when U13-14 is low and all stage outputs of U13 and U18 are low, except U13-14, at counts 509 and 1019. ϕLOCK B is an input to the optional multi-phase converter board and to counter U14. U14 is enabled through inverter U7-6 when ϕLOCK B goes high and is then clocked once simultaneously with U13 and U18 at clock pulses 255, 510, 765 and 1020. U13 and U18 are advanced one count, since their up/down inputs do not change state until after this clock pulse. The inputs to U20 and U22 are then no longer the same and ϕLOCK B goes high, disabling U14. However, U14 was clocked once, changing the state of its Q_0 output, pin 14, and the up/down inputs of U13 and U18. The count modes of U13 and U18 are then changed from up to down if pin 14 of U14 goes low or from down to up if it goes high. Thus U13 and U18 are forced to count up from count 001 to count 255, down from count 256 to 510, up from count 511 to 765 and down again from count 766 to 1020.

Counter U14-13 has its Q_1 output connected to FET Q7. The purpose of this connection is covered in a later paragraph. Its terminal count output, pin 15, goes low every 4060 counts to provide ϕLOCK A which is an input to the optional multi-phase converter board covered in paragraph 3.2.2.

3.3.1.5 QUASI-SINUSOID GENERATION

The digital-to-analog converter (D/A converter), U21, and the two amplifiers of U15 generate a quasi-sinsoidal waveform, consisting of 1020 discrete steps, in response to the inputs from programmable memories (PROM's), U17 and U19. The DC input for the D/A converter is provided by the 10 volt regulator, U10, and is adjusted for output level by R29 which is the front panel amplitude control.

The PROM outputs provide the digital input codes for the D/A converter. From the previous paragraphs, it should be apparent that the address for the PROM'S is being repeatedly incremented from 000 to 255 and then decremented from 255 back to 000. Thus, the digital input codes to the D/A converter are, likewise, being incremented and decremented. The PROM's are programmed so that, as their addresses are incremented from 000 to 255, their outputs cause U21 to produce what comprises the first 90 degrees of a quasi-sinusoidal waveform consisting of 255 discrete steps. The amplitude of each step is equivalent to:

$$\sin(90/255 \times A)$$

Where A is the discrete digital address (000 to 255).

As the address is decremented from 255 back to 000, U21 produces the opposite waveform which is the

second 90 degrees (91 to 180 degrees) of a quasi-sinusoidal waveform. The process of address incrementing and decrementing is repetitive. Therefore, in two complete cycles, U21 produces what appears as a sinusoidal waveform after full wave rectification except that it consists of 1020 discrete steps rather than being a pure analog signal. It is only necessary to invert alternate cycles of U21's output to achieve a quasi-sinusoidal waveform. This is accomplished in the amplifiers of U15.

FET Q7 grounds the connection between R27 and pin 3 of U15 whenever its gate is at + 5 volts, changing the two sections of U15 from an inverting amplifier to a non-inverting amplifier. In a previous paragraph, it was stated that counter U14 was clocked once at counts 255, 510, 765 and 1020. Its Q_1 output, pin 13, therefore, will change state at counts 510 and 1020. Pin 13 of U14 is connected to the gate of FET Q7. Whenever it is low, Q7 is turned off and U15 inverts the output of U21. When it is high, Q7 is turned on and U21's output is not inverted. A complete cycle for U21 occurs between counts 000 and 510 and between 510 and 1020. Thus, alternate cycles will be inverted to form a quasi-sinusoidal waveform at the output of U15. R25 provides a means of equalizing the amplification of U15 in its inverting and non-inverting modes so that the alternate half-cycles of the quasi-sinusoidal waveform are equal in amplitude. The output of U15 is then integrated in U16-1 to provide a ΦA OUTPUT which is a sinusoidal waveform with very low distortion. The signal at pin 3 of U16 is sinusoidal and is passed through U16-7, which has unity gain, to provide the ΦA output of the oscillator.

3.3.1.6 FREQUENCY LIMITER

The purpose of the frequency limiter is to prevent production of an output frequency above or below the range of the AC power source that is driven by the 850T. Its circuit is shown in Figure 6-4 and is comprised of transistors Q1 and Q2, dual timer U6, dual flip flop U5, NAND gate U8-6 and associated components. The Q_1 output of counter U14 (pin 14) transitions from high to low once for every half-cycle of the output frequency. This pulse clocks both sections of U5, momentarily turns on Q1 and Q2 to discharge timing capacitors C1 and C2 and triggers both timers of U6. The section of U6 associated with Q2 is adjusted with R6 so that its time period is greater than one half-cycle of the lowest permissible output frequency. As long as the output frequency of the 850T is greater than this low limit, the output of the timer will be high when the next trigger pulse from U14 occurs. The Q output of flip flop U5-5 will not change state and the input of U8-6, connected to it, will remain high. The section of U6 associated with Q1 is adjusted with R1 so that its time period is less than one half-cycle of the highest permissable output frequency. As long as the output frequency of the 850T is less than this high limit, the output of the timer will have transitioned from high to low before the next pulse from U14 occurs. The Q output of U5-8 and the input to U8-5 connected to it will remain high.

While the frequency remains within the set limits, the output of U8-6 will be low (all its inputs are high) and Q6 will be turned off and Q8 will be turned on, completing the path from the +15 volt input to 10 volt regulator U10 which provides the DC input to D/A converter U21. If the selected frequency is below the set limit, pin 2 of U6 will go low before the next pulse. The Q output of U5-5 will be clocked low, the output of U8-6 will go high turning on Q6, turning on the LIMIT LED, CR5, turning off Q8, the DC supply to U10 and the D/A converter. If the selected frequency is higher than the set limit, pin 9 of U6 will be high at the time of the next pulse and the Q output of U5-9 will be clocked low, the output of U8-6 will go high turning on Q6, turning off Q8, the DC supply to U10 and the D/A converter.

A "soft start" feature is incorporated in the frequency limiter circuit that gradually increases the voltage applied to U10 when the unit is first started and whenever it returns to operation after shutting down because of an out-of-limit frequency condition. Q6 will be turned on when power is applied or when an out-of-limit frequency is selected. When it is turned off, R20 and C15 will delay the application of full forward bias to the base of Q8. Thus, the voltage applied to U10 will slowly increase from zero to +15 volts and the output of the D/A converter will, likewise, slowly increase.

3.3.1.7 POWER SUPPLIES

The +15 volt and −15 volt supplies are obtained by regulating the +25 and −25 volt supplies of the associated power source to those levels in the circuits of Q4 and Q5. The +5 volt supply is obtained from 115 volts AC through transformer T1, rectifiers CR3 and CR4 and +5 volt regulator U9.

3.3.2 MULTI-PHASE CONVERTER

The multi-phase converter is located on a separate, optional circuit board and the circuits of that board are shown in Figure 6-4. The multi-phase converter generates a phase C (ΦC) output from the ΦA input

which is then combined with the ϕA input to produce the ϕB output. A vector diagram showing the angular displacement of each phase with respect to the others is shown in Figure 3-3. The following paragraphs explain the functioning of the multi-phase converter.

3.3.2.1 PHASE C GENERATOR

The phase C generator consists of address counters, a directional control counter system, PROM's, a D/A converter and an inverting/non-inverting amplifier that perform the same functions as those on the ϕA generator board which were decribed in previous paragraphs. The circuits, comprised of counters U1, U2 and U3, exclusive NOR gates U7 and U8, PROM's U4 and U5, D/A converter. U9 and operational amplifier U10 are interconnected in the same manner as their counterparts on the ϕA generator board. The counters are clocked by the same signal from A1U8-8 or A1U11. The DC input for the D/A converter is obtained from amplfier A1U12-6 which has its output level adjusted by the front panel amplitude control. Thus the amplitudes of the ϕA and ϕC outputs will be identical. R15 provides a fine adjustment of the ϕC amplitude.

The counters of the multi-phase converter, unlike those of the ϕA generator, are preset at the instant the ϕA output passes through the 180° point on every fourth cycle. The preset causes the waveform generated in this system to be displaced, relative to ϕA such that it lags ϕA by 120 degrees. The preset is accomplished by $\overline{\phi\text{LOCK A}}$ and ϕLOCK B through U6-8 and U6-11. $\overline{\phi\text{LOCK A}}$ goes low one clock pulse prior to the end of every fourth cycle of the output frequency (4078 clock pulses from the output of A1U8-8 or A1U11) and remains low for the next complete cycle. ϕLOCK B, as described in preceding paragraphs, goes high at counts 254, 509, 764 and 1019. Therefore, it goes high at counts 2039, 3059 and 4079. When $\overline{\phi\text{LOCK A}}$ is low and ϕLOCK B goes high, the preset mode of counters U1, U2 and U3 are enabled and preset occurs on the rising edge of the next clock pulse. The counters are preset to the count determined by the connections to their A, B, C and D inputs. S1 is not normally installed and the dotted lines across its sections 2 and 4 represent clad jumpers on the circuit board. As drawn, the A and C inputs of U1 and U2 are grounded (low) and the B and D inputs are at +5 volts. This produces a preset of AA in hexidecimal or 1010 1010 in binary. This presets the PROM address at 170. The directional control counter, U3, is preset so that its Q_A output is low and its Q_B output is high. Thus, counters U1 and U2 will be in the count down mode and U10 will be in its inverting mode. The amplitude of the waveform developed at the output of U9 from this point forward will be decreasing from maximum and, since U10 is in an inverting mode, the output of U10 will be 120° leading ϕA which is the correct phase angle for ϕC. The signal output of U10 is buffered by U12-7 to provide ϕC OUTPUT at pin 14 of J1. Capacitor C8 provides high frequency roll-off for U12-7.

3.3.2.2 B PHASE GENERATOR

The ϕB signal is obtained by summing ϕA and ϕC signals of equal amplitudes and then inverting the resultant signal through an operational amplifier. The ϕA OUTPUT signal input to this board is obtained from amplifier A1U16 which isolates it from the ϕA OUTPUT signal to the power source which is obtained at the output of A1U16-7. The ϕC signal is obtained from the output of amplifier U12-1. The two signals are summed at the input of amplifier U11-1 through the resistor network of R11 and the two sections of R3. R11 provides a fine adjustment of the ϕB angle and R7 provides a fine adjustment of the ϕB amplitude. The ϕB is buffered in U11-7 to produce ϕB OUTPUT at pin 13 of J1.

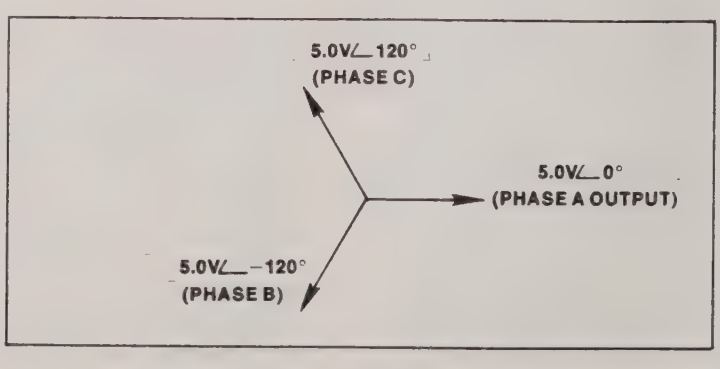

Figure 3-3. Three Phase Vector Diagram.

SECTION IV
ADJUSTMENT PROCEDURES

4.1 GENERAL

The following adjustment procedure, or any part of it, may be performed on a routine basis to insure that the oscillator remains within the specified performance limits. The procedure should always be performed after service to the oscillator.

The procedure outlines calibration of the main board (A1) which controls output frequency and phase A (ϕA) distortion, and of the Phase Board (A2) which controls the phase B (ϕB) and phase C (ϕC) amplitude and distortion.

Calibration of either the 850T or 855T Series Oscillators requires a test fixture or compatible power sources as shown in Figure 4-1. An extender accessory, Part No. 4800-703, may be used if the oscillator is to be calibrated while connected to an Invertron® power source.

4.2 PROCEDURE

4.2.1 SINGLE PHASE MODELS

4.2.1.1 DISTORTION

Connect a distortion analyzer between pin 2 and pin 8 (ground) of connector J2. If the oscillator is connected to the power source, the output of the power source may be monitored with the distortion analyzer. Adjust the front panel AMPLITUDE control to produce 5 volts RMS at the output of the oscillator, pin 2 of J2, or for full scale output of the power source. Adjust potentiometer A1R25, on the main board, for indication of lowest distortion content.

Reduce the front panel AMPLITUDE control to produce 1 volt RMS at the oscillator phase A output. Adjust A1R24 for the lowest distortion level.

CAUTION

Voltages up to 500 Volts AC are available in certain associated Invertrons®. This equipment generates potentially lethal voltages.

DEATH

on contact may result if personnel fail to observe safety precautions. Do not touch electronic circuits when power is applied. Avoid contact with connector pins C and D of the plug-in oscillator, the primary power circuits and output circuits of the associated Invertron® if oscillator is tested and/or adjusted with Invertron®.

4.2.2 TWO-PHASE MODELS

The distortion adjustment must be made prior to the

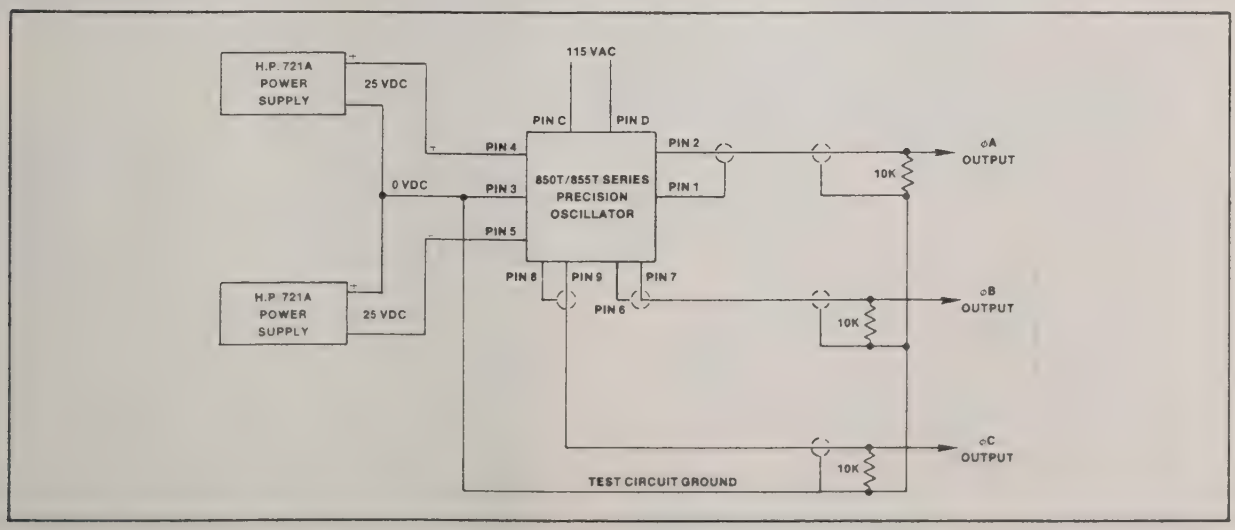

Figure 4-1. Test Circuit for 850T/855T Series Oscillators.

LEVEL adjustment of 4.2.2.2 because of interaction of the adjustments.

4.2.2.1 DISTORTION

A. Connect a distortion analyzer between pin 2 and pin 8 (ground) of connector J2. If the oscillator is connected to the power source, the ϕA output of the power source may be monitored with the distortion analyzer. Adjust the front panel AMPLITUDE control to produce 5 volts RMS at the output of the oscillator, pin 2 of J2, or for full scale output of the power source. Adjust potentiometer A1R25, on the main board, for indication of lowest distortion content.

B. Connect the distortion analyzer between pin 9 and pin 8 (ground) of connector J2. If the oscillator is connected to the power source, the ϕC output of the power source may be monitored with the distortion analyzer. Adjust potentiometer A2R14, on the phase board for an indication of lowest distortion content in the ϕC output.

Reduce the front panel AMPLITUDE control to produce 1 volt RMS at the oscillator phase C output. Adjust A2R13 for the lowest distortion level.

4.2.2.2 AMPLITUDE ADJUSTMENT

Connect an AC digital multimeter between pins 2 an 8 of J2 (A). Adjust the front panel amplitude control for 5.00 volts RMS. Connect the AC digital multimeter between pin 9 and pin 8 of J2. Adjust A2R15 for 5.00 ± 0.05 volts.

4.2.3 THREE-PHASE MODELS

There is some interaction in the following adjustments. For the correct alignment of the three-phase oscillators, the following adjustments must be made in the order shown:

A. Adjust the ϕA and ϕC distortion as directed in 4.2.2.1.

B. Adjust the level of ϕC relative to ϕA.

C. Adjust the phase angle of the ϕB output.

D. Adjust the amplitude of ϕB relative to ϕA.

4.2.3.1 DISTORTION

Perform the tests outlined in paragraphs 4.2.2.1 and 4.2.2.2.

4.2.3.2 PHASE ADJUSTMENT

A. Connect the differential phase meter between pins 2 (A), 7 (B) and ground. Adjust the frequency of variable frequency models (850T) to 100 Hz, or less. Adjust potentiometer A2R11 on the Phase Board (A2) for a phase meter indication of A leading B by 120 degrees.

4.2.3.3 AMPLITUDE ADJUSTMENT

A. Monitor the ϕA output of the oscillator with an AC digital multimeter connected between pins 2 and 8 (ground) of connector J2. Adjust the front panel AMPLITUDE control for a 5.0 volts RMS reading.

B. Connect the digital multimeter to pin 7 of connector J2. Adjust potentiometer A2R7 on the Phase Board for a 5.0 volts RMS reading.

4.2.4 FREQUENCY LIMIT ADJUSTMENT

The frequency limiter prevents the 850T/855T Series Oscillators from driving the associated power source with a frequency that is outside the power source operating limits. If the dials of the 850T are set at a frequency outside those limits, or if the frequency determining circuits should malfunction, the output of the oscillator will be shut off and a red LIMIT indicator on the front panel will light. The LIMIT indicator will be extinguished and the output will be turned back on when the dials are set to a frequency within the power source limits. The limiter is also a feature of the 855T and safeguards against a malfunction of the frequency determining circuits. The standard adjustment permits oscillator operation between the limits of 45 Hz and 5000 Hz. If a wide-band power source is to be driven by either oscillator, the limits may be readjusted.

4.2.4.1 850T ADJUSTMENT

To adjust the upper frequency limit, set the RANGE switch to X100 and select the highest frequency desired. Adjust potentiometer A1R1 on the main board (A1) to the point where the LIMIT indicator is illuminated then back off on the adjustment slightly. Select a frequency higher than the set limit and verify LIMIT indicator illumination. Similarly, set the lower limit frequency and adjust A1R6 for LIMIT indicator illumination then back off on that adjustment slightly. Select a frequency lower than the set limit and verify LIMIT indicator illumination. When adjusting the limit potentiometers, note that some hysteresis exists in the adjustments. This prevents amplitude chatter when programming frequencies around the frequency limits.

4.2.4.2 855T ADJUSTMENT

The adjustment for the 855T is accomplished in the same manner as that for the 850T described in 4.2.4.1 except that the upper and lower limits must be set with the DIP switches mounted on the main board (A1). Figure 4-2 shows the location of the DIP switches. Table 4-1 lists the switch closures necessary to program 45, 60, 400 and 5000 Hz. If it is desired to program other frequencies, contact California Instruments' Customer Service Department for assistance.

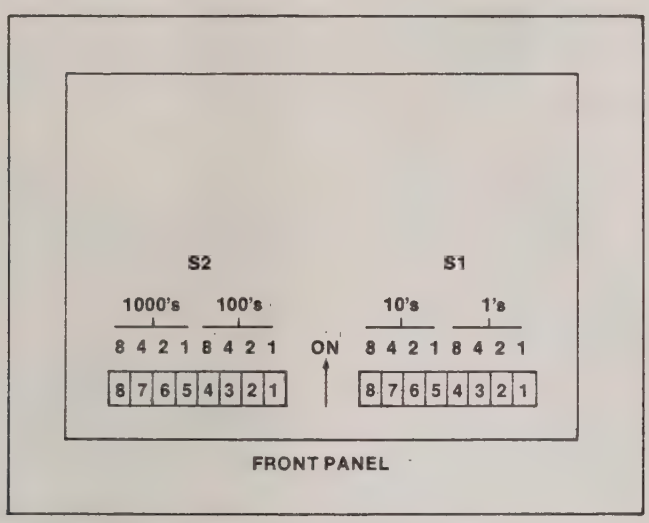

Figure 4-2. Location of Frequency Programming DIP Switches, Model 855T.

Table 4-1. Model 855T Frequency Programming.

	S2		S1	
	8 7 6 5	4 3 2 1	8 7 6 5	4 3 2 1
45 Hz	X X X X	X X X X	X - X X	X - X -
60 Hz	X X X X	X X X X	X - - X	X X X X
400 Hz	X X X X	X - X X	X X X X	X X X X
5000 Hz	X - X -	X X X X	X X X X	X X X X

- = OFF
X = ON

SECTION V—MAINTENANCE

5.1 GENERAL

This section of the manual contains information to assist in troubleshooting the Models 850T and 855T Precision Oscillators. A table of power supply voltages and "logic tree" types of troubleshooting charts are included. A review of the Theory of Operation in Section III is recommended prior to attempting to troubleshoot either unit. The technician will then have a good understanding of the circuit operation which will further assist in the troubleshooting task.

5.2 REQUIRED TEST EQUIPMENT

The test equipment required to perform the tests outlined in this section is listed in Table 5-1.

Table 5-1. Required Test Equipment.

California Instruments Model DMM-53 Digital Multimeter.
Frequency Counter with 20 MHz capability.
Calibrated Oscilloscope with 20 MHz, or better, response.

5.3.1 POWER SUPPLY TEST

Reduce the output of the oscillator to zero and measure the +15 volt, −15 volt and +5 volt supply lines. Verify that they are within the limits shown in Table 5-2.

If the power supply voltages are within limits, proceed to the next paragraph. If they are not, troubleshoot and repair the defective power supply.

5.3.2 CLOCK GENERATOR TEST

Check the clock generator signal with the oscilloscope at A1U13, pin 2. The clock signal should be a square wave with an amplitude of 3 volts, or more, peak-to-peak. If there is no clock signal, refer to the clock generator troubleshooting chart of Figure 5-1. If the clock signal is present, but the oscillator output is absent or severely distorted, refer to the waveform synthesizer troubleshooting chart of Figure 5-2.

Table 5-2. Power Supply Voltage Limits.

LINE	TEST POINT	LIMITS
+15V	TP3	+14.6 to +16.2 VDC
−15V	TP2	−14.6 to −16.2 VDC
+5V		+4.75 to +5.25 VDC

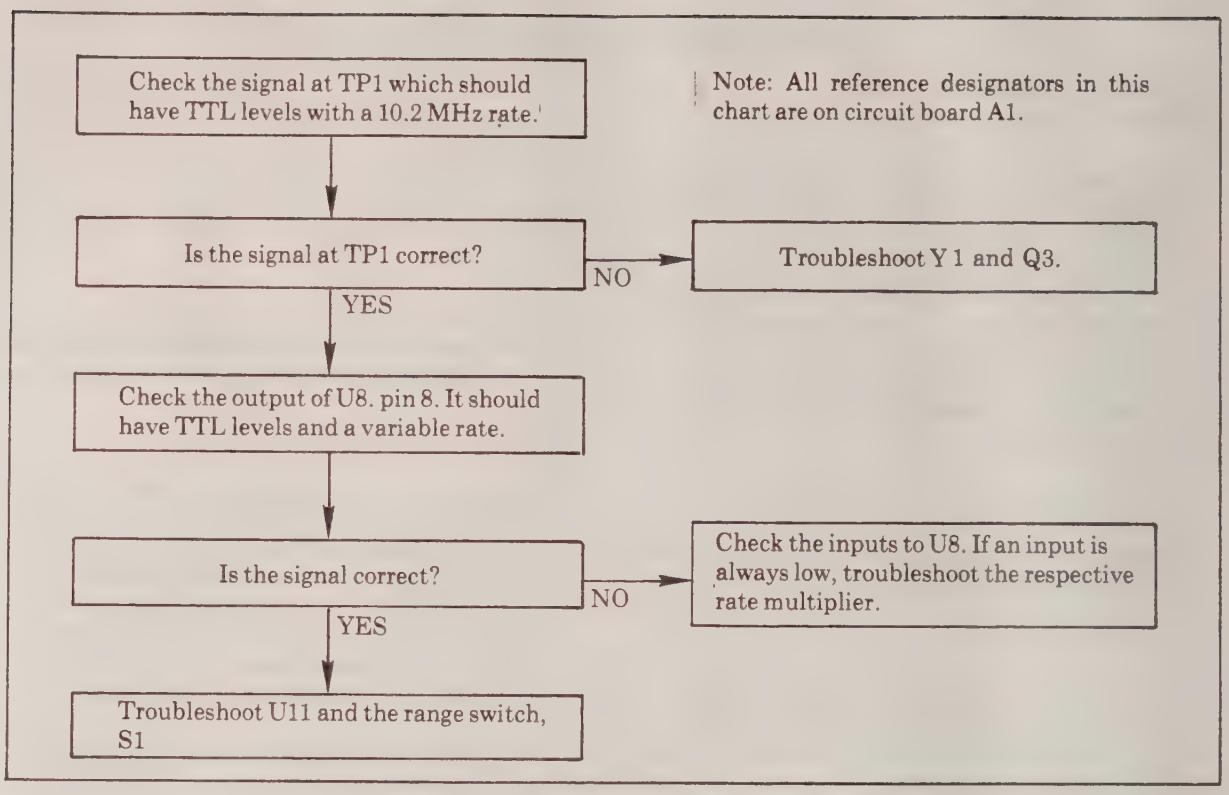

Figure 5-1. Troubleshooting Chart, Clock Generator.

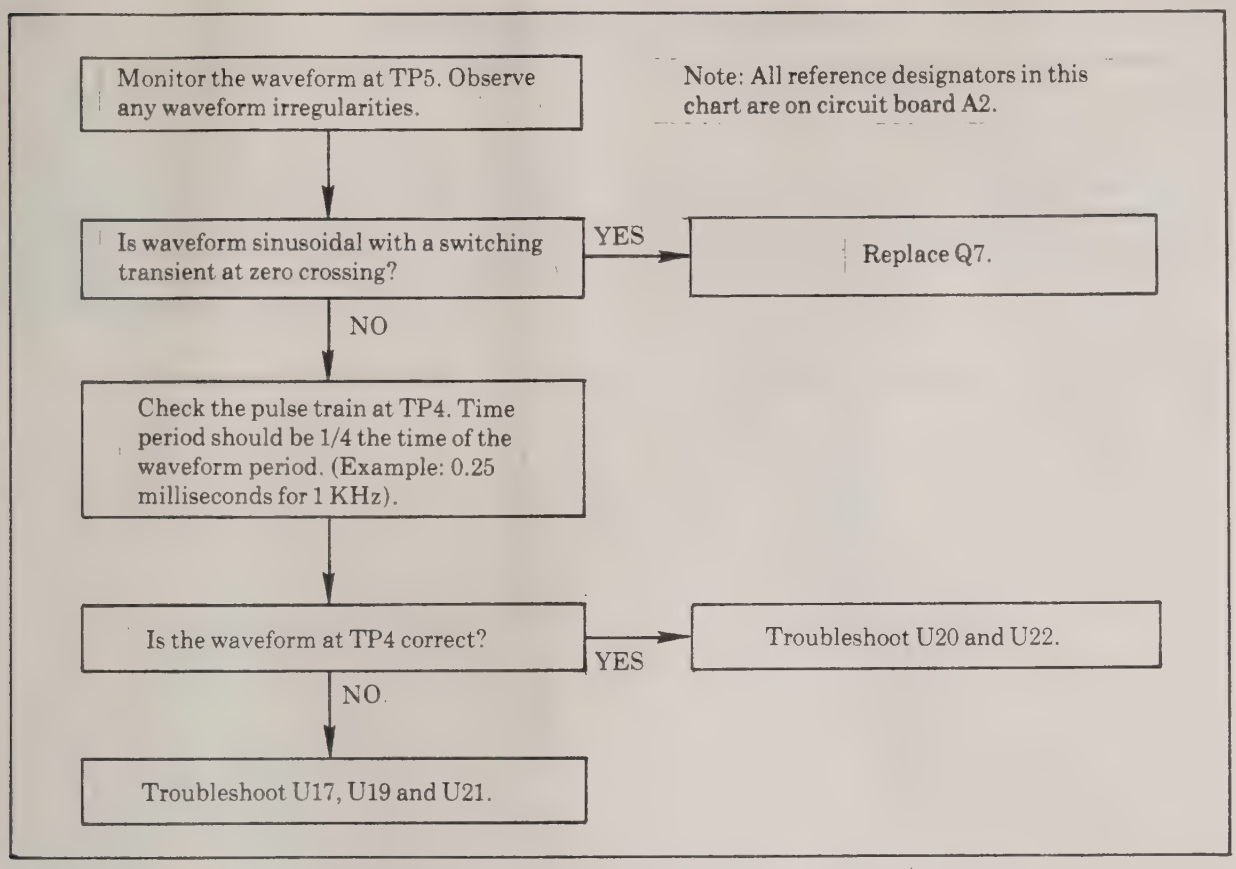

Figure 5-2. Troubleshooting Chart, Waveform Synthesizer.

SECTION VI—DIAGRAMS

6.1 GENERAL

This section of the manual contains schematic and mechanical diagrams necessary for the operation and maintenance of the 850T/855T Series Precision Oscillators. The schematic diagrams illustrate the circuits while the mechanical assembly drawings indicate the component locations.

6-3 REFERENCE DESIGNATIONS

6-4 Partial reference designators are shown on schematic and mechanical drawings. Prefix these reference designators with assembly and/or sub-assembly designation for the complete reference designator. For example:

Assembly/Sub-Assembly	Component	Component Designation
None	T1	T1
A1	IC6	A1IC6
A2	R44	A2R44
A3	C7	A3C7
A4	Q2	A4Q2

REV	AUTH	DESCRIPTION	ZONE	EFF OR	DATE	APRD
D		ADDED C40, SCREW 2056 ST.				
E		REMOVED EXCESS HARDWARE AB 9 83 DDB 0620				
F		ADDED R1 RESISTOR				

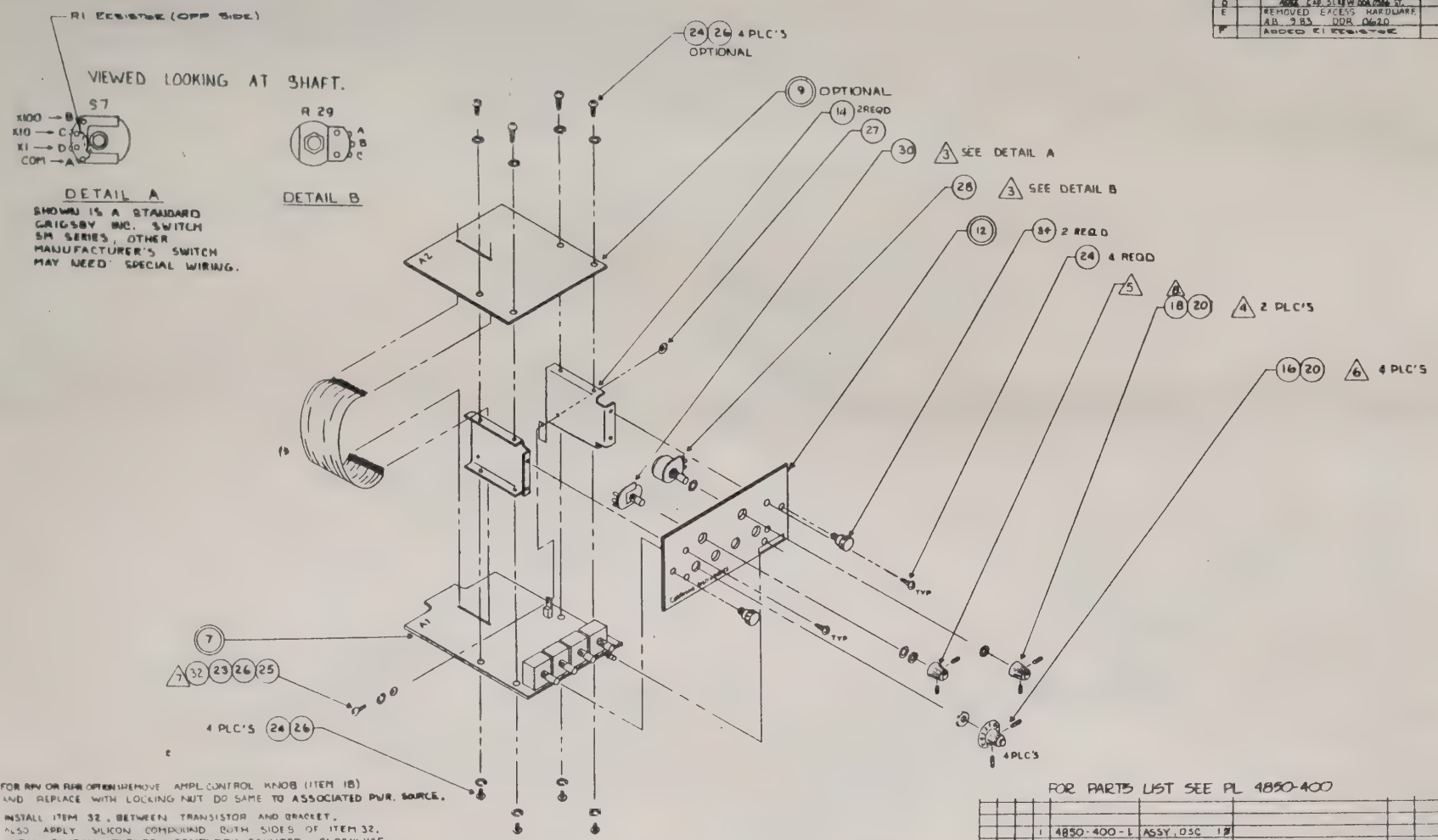

FOR PARTS LIST SEE PL 4850-400

REQD PER ASSY	ITEM NO	PART NUMBER	PART NAME	MATERIAL — SPECIFICATION	CODE IDENT	FINISH	REF DES	ZONE
	1	4850-400-L	ASSY, OSC 1#					

DIM IN INCHES TOLERANCES .XXX = .010 .XX = .03 .X = .07

BREAK ALL SHARP CORNERS & EDGES MACH SURFACES ✓

D SIZE

TITLE ASSEMBLY, OSCILLATOR, MODEL 850T

CALICO

CALIFORNIA INSTRUMENTS CORP SAN DIEGO, CALIFORNIA

COMPANY NO. 16067

MODEL 850T 3#

RELEASE 7/9

CHECKED 7/9

DESIGN

DRAFTING

PURCHASING

PROJ ENGR

OP ENGR

DWG NO D4850-400 REV F

SCALE NONE SHEET 1 OF 1

NOTES (UNLESS OTHERWISE SPECIFIED)

4. FOR RPV OR RHR OPTION REMOVE AMPL CONTROL KNOB (ITEM 18) AND REPLACE WITH LOCKING NUT DO SAME TO ASSOCIATED PWR. SOURCE.
4. INSTALL ITEM 32, BETWEEN TRANSISTOR AND BRACKET. ALSO APPLY SILICON COMPOUND BOTH SIDES OF ITEM 32.
6. WITH SWITCH TURNED COMPLETY COUNTER CLOCKWISE, INSTALL ITEM 16, SUCH THAT "0" IS AT TOP OF DIAL.
4. WITH ITEM 30 TURNED ON CENTER STOP, INSTALL ITEM 18, SUCH THAT DOT IS POINTING TO "10X" ON SILKSCREEN.
6. WITH ITEM 28 TURNED COMPLETLY COUNTER CLOCKWISE, INSTALL ITEM 18, SUCH THAT DOT IS POINTING TO TOP OF UNIT.
3. INSTALL ITEMS 30 & 28 SO TERMINALS ARE AS SHOWN.
2. FOR WIRE TAB TABLE SEE A 4850-050.
1. FOR SCHEMATIC DWGS. SEE E4850-070 FOR A1 RC.B. AND E4850-071 FOR A2.

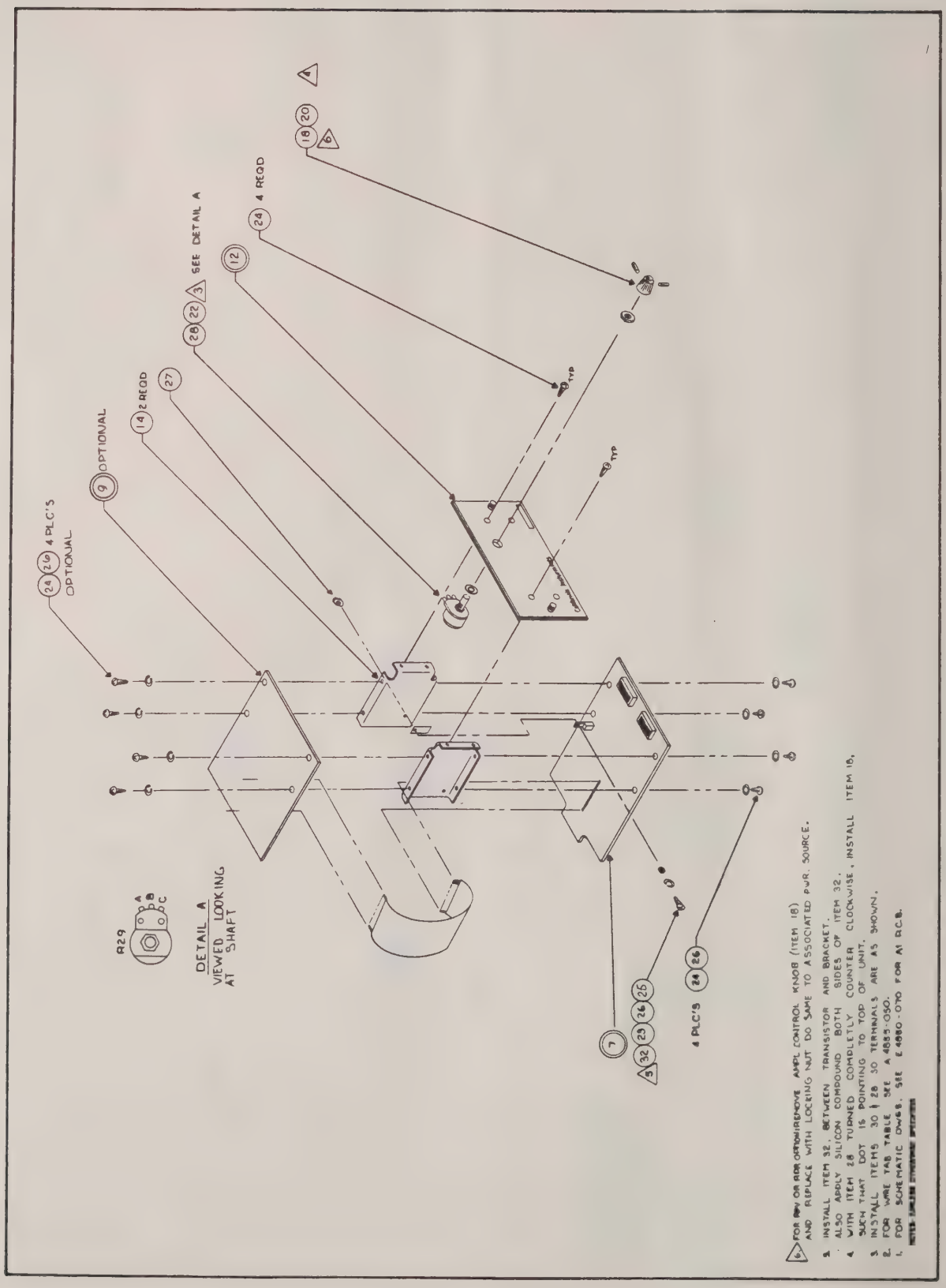

Figure 6-2. Assembly Diagram, Model 855T Oscillator.

REVISIONS						
REV	AUTH	DESCRIPTION	ZONE	EFF ON	DATE	APRD
K		[illegible]			[illegible]	[illegible]
N		[illegible]			[illegible]	[illegible]
P		NOTE BY BUBBLE NO. 115 WAS TP1, TP2, TP6 DDR 0503 AB 12/82			[illegible]	[illegible]
R		ADDED BUS WIRE & TUBING			[illegible]	[illegible]
S		CHANGE ROUTE OF BUSWIRES			11-14-83	[illegible]

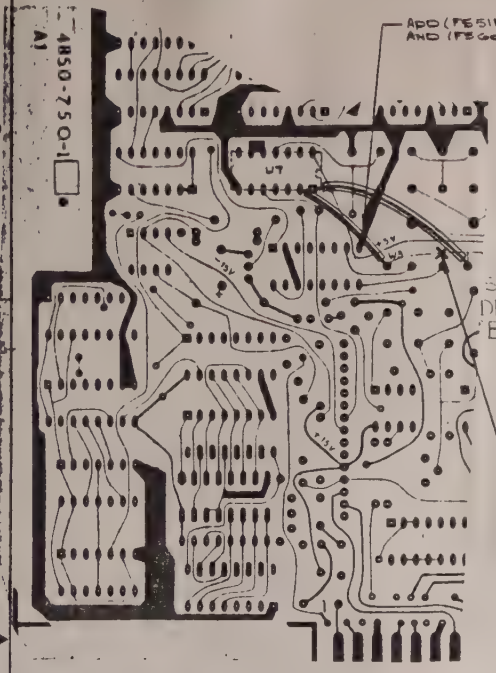

CIRCUIT SIDE
(-1 ONLY)

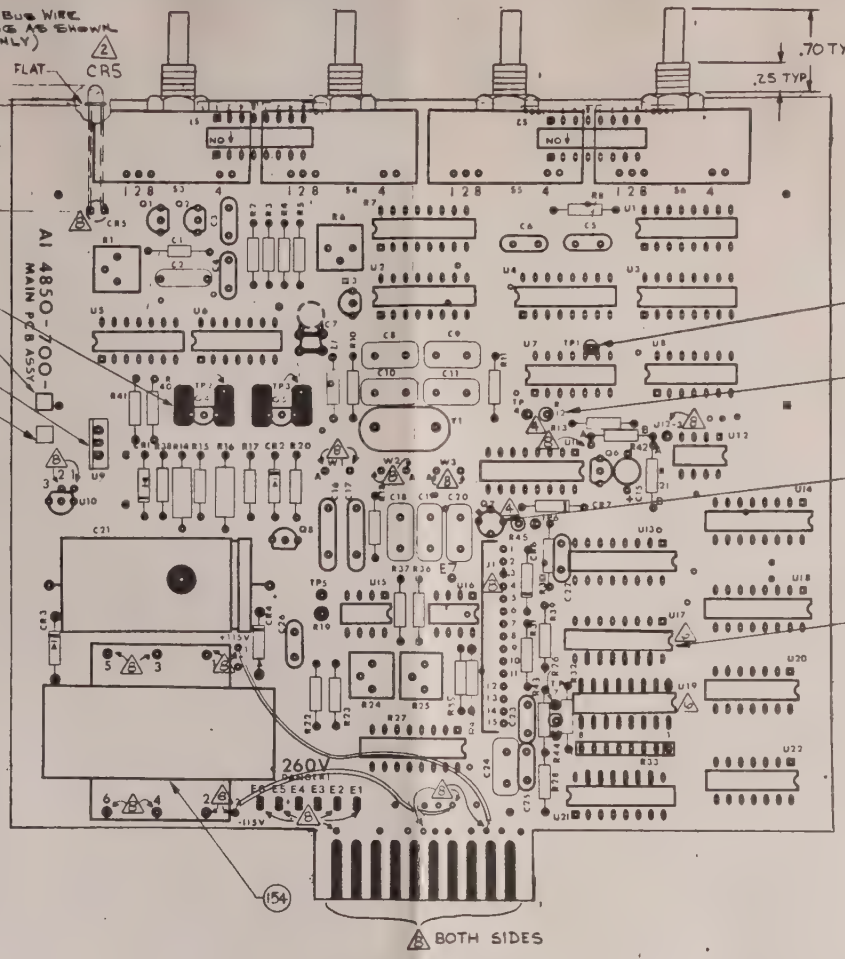

COMPONENT SIDE

(115) SEE DETAIL C
TP1, TP2, TP3

(4) SEE DETAIL A
R12, R19, R26, R44, R45

(152) INSTALL UNDER Q7

(150) INSTALL UNDER U17/U19

(154)

DETAIL C
TP1, TP2, TP3

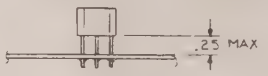

DETAIL B
Q4, Q5

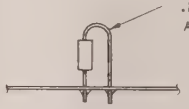

DETAIL A
R12, R19, R26, R44, R45

(15) PERMANENTLY MARK LATEST ASSY REV LTR IN SPACE PROVIDED.

14. FOR OPTION RPV: SEE E.R.A., ASSEMBLY DRAWING D4850-400. ADD 24 AWG RED JUMPER FROM A1U10-1 TO A1E5. ADD 24 AWG BLACK JUMPER FROM A1J2-10 TO A1R29-A. SEE W.T.T.
13. FOR OPTION "A": THIS CREATES AN .0001% ACCURACY ON A1 P.C.B. ADD A1C7 (CALICO #6-10909), DELETE A1C10 (CALICO #6-10003), REPLACE WITH A1C10 CALICO #6-11072. SEE E.R.A. AND TEST PROCEDURE.
12. FOR OPTIONAL 260V SERVO OUTPUTS: A2 P.C.B. (4850-702-2 OR 4850-702-3) IS USED. SEE SCHEMATIC 4850-078. SEE ALSO E.R.A. TO CONVERT OUTPUT, SEE W.T.T.
11. FOR SQUARE WAVE OPTION: OSCILLATOR CAPABILITY EXTENDS ONLY TO 1Ø AND 2Ø AND 3D PHASE UNITS. SEE 4850-410-2 ADD DEL PARTS LIST FOR CHANGES TO 4850-700 (A1 P.C.B. AND 4850-702 A2 P.C.B.
10. FOR RESISTANCE PROGRAMMING: IF 2Ø OR 3Ø OUTPUTS ARE NEEDED, USE A2 P.C.B. (4850-702-1). SEE SCHEMATIC E4850-078 FOR CHANGES TO A2 P.C.B. ALSO SEE 4850-410-1 ADD DEL PARTS LIST FOR CHANGES TO A1 P.C.B AND A2 P.C.B. SEE W.T.T.

(6) SOLDER U9 IN PLACE, AFTER SIDE BRACKET IS IN PLACE.
(8) CLAD PADS MUST BE MASKED BEFORE WAVE SOLDER.
(7) WHEN ASSEMBLING PC.B. MARK DASH NUMBER (-1, -2, -3, ETC.) IN BLOCK PROVIDED.
(5) I.C.'S U17 AND U19 MUST BE PROGRAMMED PER SPEC CIC 207-3 FOR U17 AND CIC 207-2 FOR U19.
5. WIRE TAB TABLE (W.T.T.) IS 4850-050 FOR 850T AND 4855-050 FOR 855T/853T.
(4) INSTALL ITEMS R12, R19, R26 AS SHOWN IN DETAIL "A".
3. NOTE THAT THIS ASSEMBLY SHOWS LOCATIONS FOR ALL POSSIBLE COMPONENTS. SEE PARTS LIST FOR COMPONENTS NOT USED IN SPECIFIC ASSEMBLIES.
(2) INSTALL CR5, AS SHOWN, AFTER WAVE SOLDER.
1. FOR SCHEMATIC, SEE DRAWING E4850-070.

NOTES: (UNLESS OTHERWISE SPECIFIED)

	RPV	SEE ERA	NOTE 14
	"A"	.0001% ACCURACY	NOTE 13
4850-410-2		SQUARE WAVE	NOTE 11
4850-410-1	RPR	RESISTANCE PROGR.	NOTE 10
4850-700-3		STD 853T	SEE ERA
4850-700-2		STD 855T	SEE P.L.
4850-700-1		STD 850T	SEE P.L.
ASSEMBLY NO.	OPTION	FUNCTION / NOTE REF	

SEE SPECIFIC PARTS LIST OR ERA FOR EACH OPTION

OPTION LIST FOR 850T/853T/855T

DASH NO.	QTY REQD	NEXT ASSEMBLY	EFF ON	AUTH
-2	1	4855-400	855T	
-1	1	4850-400	850T	

ITEM NO	PART NUMBER	PART NAME	MATERIAL — SPECIFICATION	CODE IDENT	FINISH	REF DES	ZONE
REQD PER ASSY							

DIM IN INCHES TOLERANCES .XXX = .010 .XX = .031 .X = .30°
BREAK ALL SHARP CORNERS & EDGES
MACH SURFACES
DWG SIZE D

EXCEPT AS OTHERWISE PROVIDED BY CONTRACT, THESE DRAWINGS AND SPECIFICATIONS ARE THE PROPERTY OF CALICO AND SHALL NOT BE REPRODUCED OR COPIED OR USED AS THE BASIS FOR THE MANUFACTURE OR SALE OF APPARATUS WITHOUT WRITTEN PERMISSION.

TITLE [illegible] A1
MODEL 850T
RELEASE
CHECKER
DESIGN
DRAFTSMAN
PURCHASING
PROJ ENGR
CHF ENGR

CALICO
CALIFORNIA INSTRUMENTS CORP
SAN DIEGO, CALIFORNIA

CONTRACT NO.
CODE IDENT 16067
DWG. NO. 4850-700
REV S
SCALE 2/1
SHEET

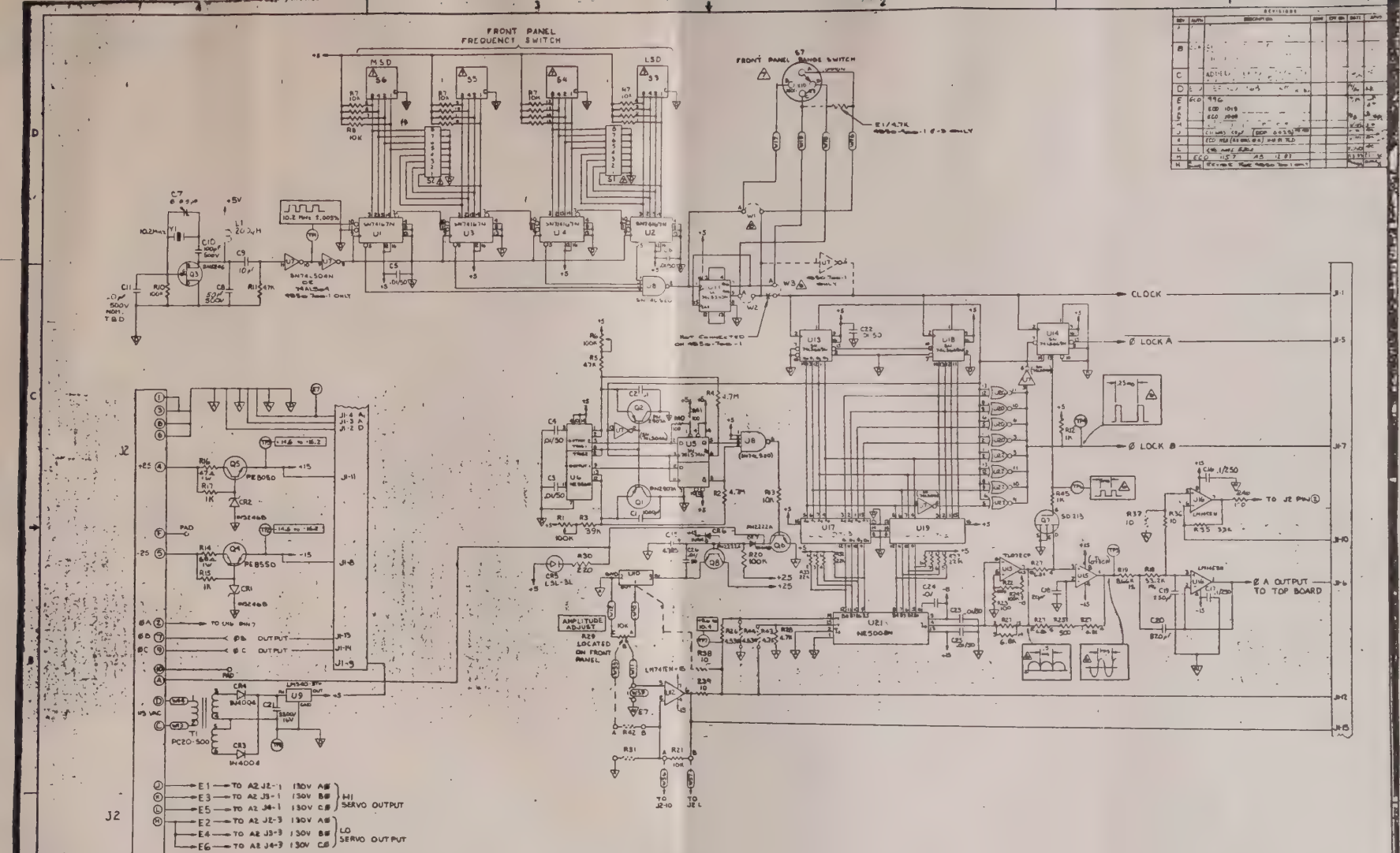

10. For Resistance Programming: If 28 or 30 outputs are desired, use A2 P.C.B. (4850-702-3). See Schematic E4850-070 for changes to A2 P.C.B. Also see 4850-410-1 add/delete parts list for changes to A1 P.C.B. and A2 P.C.B. See W.T.T.
9. For Servo Outputs: Standard output is 130V. A2 P.C.B. (4850-702) must be used. Connections to A1C1 through A1C5 must be made. See W.T.T. and Schematic 4850-070.
8. JMP2 jumper is installed in 8551 only. W2 and W3 jumpers are not used on standard 850T or 855T.
7. U4, U5, U6 and U7 are used on 850T only. U1 and U2 used on 855T.
6. All wave forms shown with frequency programmed to 10Hz and maximum amplitude.
5. ⓒ indicates card edge connector
4. Note that this Schematic is a reference drawing, for specific parts used refer to Parts List of specific model.
3. For W.T.T. use 4850-050 for 850T and 4855-055 for 855T/855T.
2. All resistors are in OHMS, 1W, 5%.
1. All capacitors are in Picofarads/Voltage.

NOTES (Unless otherwise specified).

16. Listed here are last components used: J2, C28, C07, U8, U14, U7, T1, TP5, U22 and T1.
15. Listed here are components used only on special applications. R38, R37, U41.
14. For Option RPV: See E.R.A., Assembly Drawing 4850-400. Add 24 AWG red jumper from A1U10-1 to A1C5. Add 24 AWG black jumper from A1J2-10 to A1R29-A. See W.T.T.
13. For Option 2AV: Two ~~ohmite resistors on A2 P.C.B. Add A1C1 (Cover 05-10800). Delete A1C10 (Cover 05-11003). Delete ~~two A1C6 (Cover 05-11003). See E.R.A. and Jper Programs.~~
12. For Optional 260V Servo Outputs: A2 P.C.B. (4850-702-2 or 4850-702-3) is used. See Schematic 4850-070. Add also E.R.A. To convert output, use W.T.T. 4850-050 for 850T or 4855-050 for 855T/855T.
11. For Square Wave Option: Oscillator capability extends only to 10 and 20 and 30 units. See 4850-410-2 add/delete for mods to A1 and A2 P.C.B.

	RPV	VOLTAGE PROG. SEE ERA	NOTE 14
	A	.0001% ACCURACY	NOTE 13
		SQUARE WAVE	NOTE 11
	RPR	RESISTANCE PROG	NOTE 10
4850-700-3		STD 855T SEE ERA	
4850-700-2		STD 855T	NOTES 7,8
4850-700-1		STD 850T	NOTES 7,8
ASSY NO.	OPTION	FUNCTION/NOTE REF	

SEE SPECIFIC PARTS LIST OR ERA FOR EACH OPTION
OPTION LIST FOR 850T/855T/855T

REVISIONS						
REV	AUTH	DESCRIPTION	ZONE	EFF ON	DATE	APRD
		SEE SH 1				

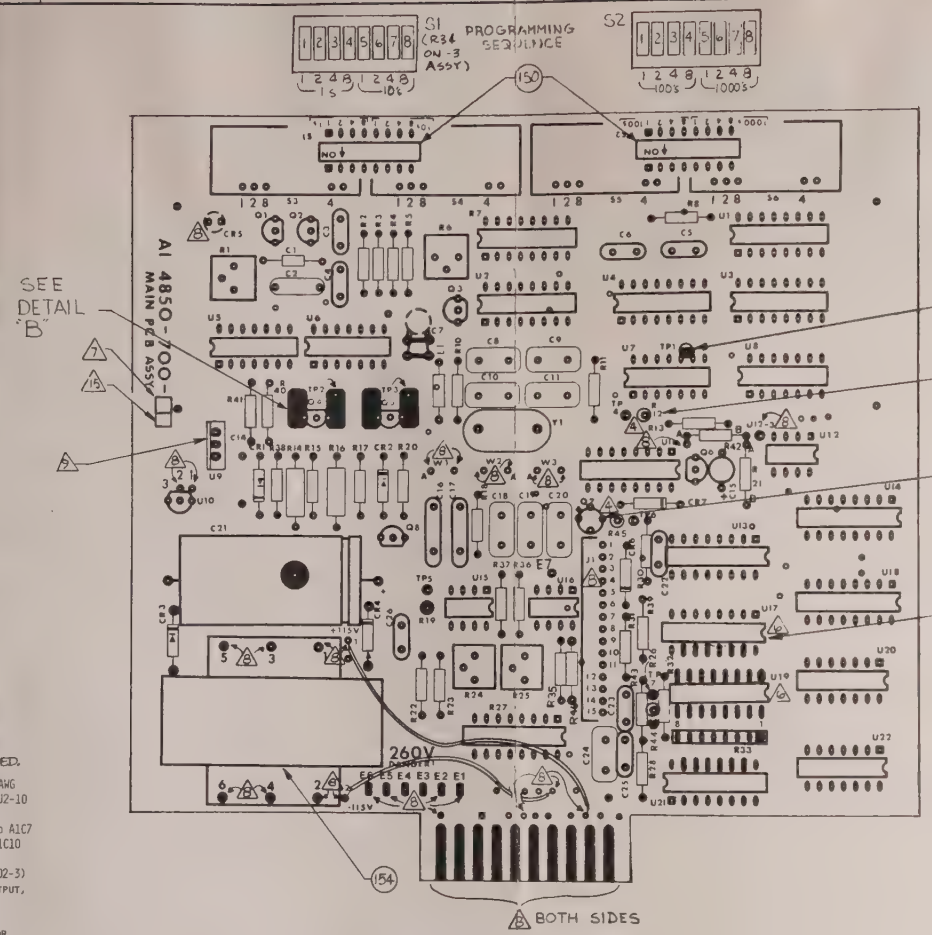

(115) SEE DETAIL C
TP1, TP2, TP3

(4) SEE DETAIL A
R12, R19, R26, R44, R45

(152) INSTALL UNDER Q7

(150) INSTALL UNDER U17/U19

DETAIL C
TP1, TP2, TP3

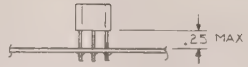

DETAIL B
Q4, Q5

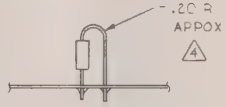

DETAIL A
R12, R19, R26, R44, R45

(15) PERMANENTLY MARK LATEST ASSY REV LTR. IN SPACE PROVIDED.

14. For Option RPV: See E.R.A., Assembly drawing D4850-400. Add 24 AWG red jumper from A1U10-1 to A1E5. Add 24 AWG black jumper from A1J2-10 to A1R29-A. See W.T.T.
13. For Option "A": This creates an .0001% accuracy on A1 P.C.B. Add A1C7 (Calico #6-10909), delete A1C10 (Calico #6-10003), replace with A1C10 Calico #6-11072. See E.R.A. and Test Procedure.
12. For Optional 260V Servo Outputs: A2 P.C.B. (4850-702-2 or 4850-702-3) is used. See Schematic 4850-078. See also E.R.A. To convert output, see W.T.T.
11. For Square Wave Option: Oscillator capability extends only to 10, and 20 and 30 phase units. See 4850-410-2 add/delete parts list for mods to 4850-700(A1) P.B.C. and 4850-702(A2) P.B.C.
10. For Resistance Programming: If 20 or 30 outputs are needed, use A2 P.C.B. (4850-702-1). See Schematic E4850-078 for changes to A2 P.C.B. Also see add/delete parts lists and assy. 4850-410-1 for changes to A1 and A2 P.C.B.'s. See W.T.T. 4850-050.

(9) Solder U9 in place, after side bracket is in place.
(8) Clad pads must be masked before wave solder.
(7) When assembling P.C.B. mark dash number (-1, -2, -3, etc.) in block provided.
(6) I.C.'s U17 and U19 must be programmed per Sec. CIC 207-3 for U17 and CIC 207-2 for U19.
5. Wire Tab Table (W.T.T.) is 4850-050 for 850T and 4855-050 for 855T/853T.
(4) Install items R12, R19, R26 as shown in Detail "A".
3. Note that this assembly shows locations for all possible components. See Parts List for components not used in specific assemblies.
(2) Install CR5, as shown, after wave solder.
1. For Schematic, see drawing E4850-070.

NOTES: (UNLESS OTHERWISE SPECIFIED)

	RPV	SEE ERA	NOTE 14
	"A"	.0001% ACCURACY	NOTE 13
4850-410-2		SQUARE WAVE	NOTE 11
4850-410-1	RPR	RESISTANCE PROGR.	NOTE 10
4850-700-3		STD 853T	SEE ERA
4850-700-2		STD 855T	SEE P.L.
4850-700-1		STD 850T	SEE P.L.
ASSEMBLY NO.	OPTION	FUNCTION / NOTE REF	

SEE SPECIFIC PARTS LIST OR ERA FOR EACH OPTION

OPTION LIST FOR 850T/853T/855T

REQD PER ASSY	ITEM NO	PART NUMBER	PART NAME	MATERIAL — SPECIFICATION	CODE IDENT	FINISH	REF DES.	ZONE

DASH NO	QTY REQD	NEXT ASSEMBLY	EFF ON	AUTH
-2	1	4855-400		
-1	1	4855-400		

DIM IN INCHES TOLERANCES XXX = .010, XX = .03, X° = 30°. BREAK ALL SHARP CORNERS & EDGES. MACH SURFACES 125. DWG SIZE D.

EXCEPT AS OTHERWISE PROVIDED BY CONTRACT, THESE DRAWINGS AND SPECIFICATIONS ARE THE PROPERTY OF CALICO AND SHALL NOT BE REPRODUCED OR COPIED OR USED AS THE BASIS FOR THE MANUFACTURE OR SALE OF APPARATUS WITHOUT WRITTEN PERMISSION.

TITLE: PRINTED CIRCUIT ASSY, MAIN BOARD, A1

MODEL: 855T / 853T

RELEASE: 7-1-72

CHECKER: Sherlock 7-1-72 — PURCHASING

DESIGN: — PROJ ENGR: D.M. Ford 7/6/72

DRFTSMN: P.C.C. 4/12/72 — CHF ENGR

CALICO — CALIFORNIA INSTRUMENTS CORP SAN DIEGO, CALIFORNIA

CONTRACT NO — CODE IDENT 16067

DWG NO. 4850-700 — REV P

SCALE 2/1 — SHEET 2 of 2

4850-700 P

DRAWING 40 520 38865

CALICO F-888

REVISIONS						
REV	AUTH	DESCRIPTION	ZONE	EFF ON	DATE	APRD
B		CLAIRIFIED ORIENTATION OF J2 THRU J4 & XJ2 THRU XJ4 - [illegible]			[illegible]	[illegible]

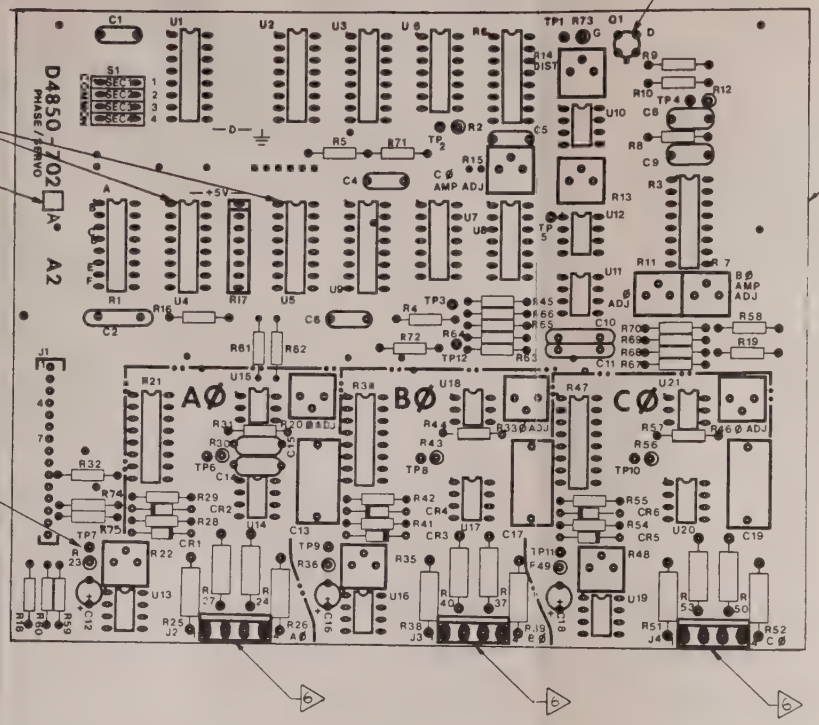

COMPONENT SIDE SHOWN

APPROX .25 R BEND

DETAIL A-A

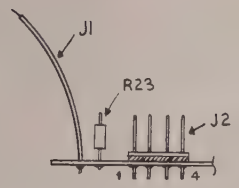

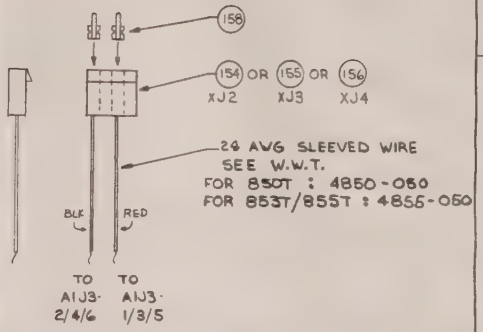

NOTE: STD OSC. IS WIRED FOR 130V SERVO OUTPUT. TO CONVERT TO 260V SERVO OUTPUT DO AS ILLUSTRATED:

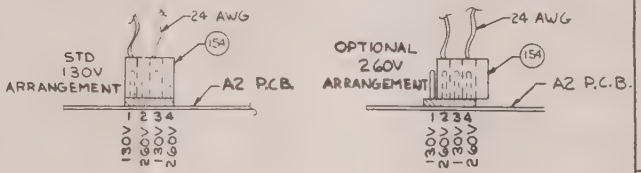

11. FOR SQUARE WAVE : REMOVE C9, C8, U4 AND U5. SEE 4850-410-2 ADD/DEL PARTS LIST.
10. FOR RESISTANCE PROGRAMMING : REMOVE R4 AND R5. ADD R71 AND R72. SEE 4850-410-1 ADD/DEL PARTS LIST.
9. WHEN P.C.B. IS ASSEMBLED MARK DASH NO. (-1, -2 OR -3) OF ASSEMBLY IN THIS BOX.
8. THIS ASSY DWG SHOWS ALL THE POSSIBLE COMPONENTS IN THE P.C.B., SEE PARTS LIST FOR THOSE COMPONENTS NOT USED.
7. CAUTION, Q1 IS SUPPLIED WITH A RUBBER BAND AROUND IT'S LEGS. THIS BAND MUST BE LEFT IN PLACE UNTIL AFTER SOLDERING. AFTER SOLDERING BAND MUST BE CUT AND REMOVED. INSTALL SOCKET UNDER Q1.
6. INSTALL J1, J2, J3, AND J4 BEFORE WAVE SOLDER.
5. PROGRAM U4 PER SPEC. CIC 207-3.
4. PROGRAM U5 PER SPEC. CIC 207-2.
3. INSTALL I.C. SOCKETS UNDER U4 & U5.
2. INSTALL R73, R2, R12, R23, R30, R36, R43, R49, AND R56. AS SHOWN IN DETAIL A-A.
1. FOR SCHEMATIC DWG SEE E4850-078.

NOTES: (UNLESS OTHERWISE SPECIFIED)

FOR PARTS LIST SEE PL 4850-702

REQD PER ASSY	ITEM NO	PART NUMBER	PART NAME	MATERIAL — SPECIFICATION	CODE IDENT	FINISH	REF DES.	ZONE

DIM IN INCHES TOLERANCES .XXX = .010 .XX = .03 .X' = .30

BREAK ALL SHARP CORNERS & EDGES. MACH SURFACES ✓

DWG SIZE D

EXCEPT AS OTHERWISE PROVIDED BY CONTRACT THESE DRAWINGS AND SPECIFICATIONS ARE THE PROPERTY OF CALICO AND SHALL NOT BE REPRODUCED OR COPIED OR USED AS THE BASIS FOR THE MANUFACTURE OR SALE OF APPARATUS WITHOUT WRITTEN PERMISSION

TITLE ASSEMBLY PHASE / SERVO P.C.B. A2

MODEL 850T / 855T / 853T

RELEASE [illegible]

CHECKER [illegible] 8/80 PURCHASING

DESIGN Robb 1/80 PROJ ENGR [illegible]

DRFTSMN Robb 1/80 CHF ENGR

DASH NO.	QTY. REQD	NEXT ASSEMBLY	EFF ON	AUTH

CALICO
CALIFORNIA INSTRUMENTS CORP
SAN DIEGO, CALIFORNIA

CONTRACT NO.

CODE IDENT 16067

DWG NO. D4850-702 REV B

SCALE 2/1 SHEET 1 OF 2

D4850-702 B

MODEL 850T/855T

REV		DESCRIPTION			
A		SEE ECO 968			
B		SEE ECO 1019	AB 11/80		
C		ECO 1067			
D		SEE DDR 0290	BS 12/81		

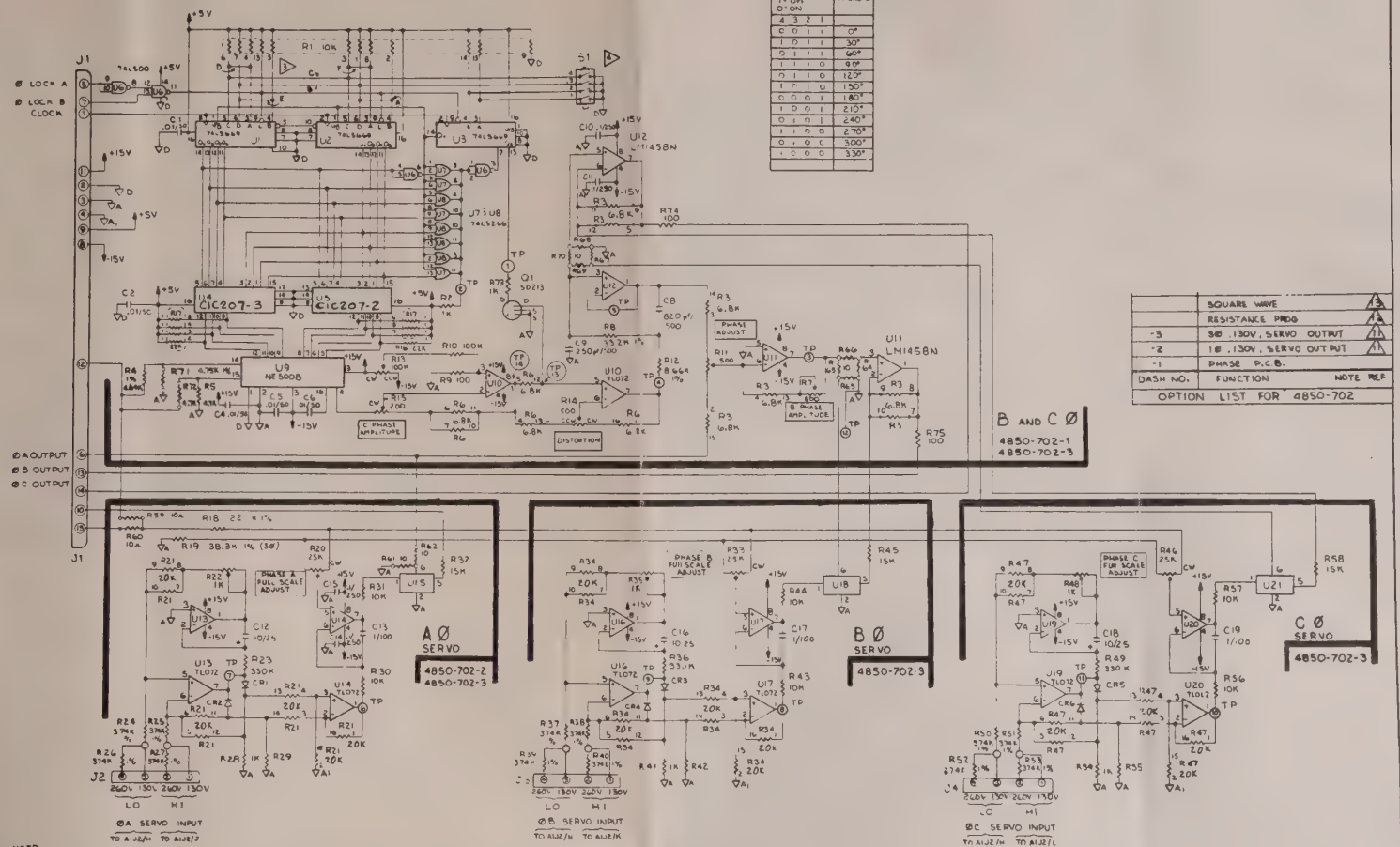

S1 SET TABLE				
SWITCH JUMPER 1 = OFF 0 = ON				PHASE ANGLE A LAG C
4	3	2	1	
0	0	1	1	0°
1	0	1	1	30°
0	1	1	1	60°
1	1	1	0	90°
0	1	1	0	120°
1	0	1	0	150°
0	0	0	1	180°
1	0	0	1	210°
0	1	0	1	240°
1	1	0	0	270°
0	1	0	0	300°
1	0	0	0	330°

DASH NO.	FUNCTION	NOTE REF
	SQUARE WAVE	13
	RESISTANCE PROG	12
-3	3Ø, 130V, SERVO OUTPUT	11
-2	1Ø, 130V, SERVO OUTPUT	11
-1	PHASE P.C.B.	

OPTION LIST FOR 4850-702

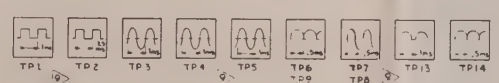

10. LAST REF DES. USED C20, CR6, J4, R75, Q1, TP13, U21. REF. DES. NOT USED C3, C7.
9. ALL WAVEFORMS ARE WITH THE FREQUENCY SET TO 1KHz AND MAXIMUM AMPLITUDE.
8. ALL DIODES ARE 1N4148.
7. THIS SCHEMATIC IS A REF. DWG., FOR SPECIFIC PARTS USED REFER TO PARTS LIST OF SPECIFIC MODEL.
6. FOR PARTS LIST SEE PL 4850-702 SHTS 4 THRU 7.
5. FOR ASSY OF P.C.B. SEE D 4850-702 SHT 2.
4. P.C.B. CLAD JUMPERS (BETWEEN SECTIONS 1 AND 4) CUT ON SOME APPLICATIONS.
3. P.C.B. CLAD JUMPERS (A,B,C,D,E,F) CUT ON SOME APPLICATIONS.
2. ALL CAPACITORS ARE IN MICROFARADS / VOLTAGE.
1. ALL RESISTORS ¼W, 5%, AND ARE IN OHMS.

NOTES (UNLESS OTHERWISE SPECIFIED)

13. FOR SQUARE WAVE: SEE 4850-410-2. DELETE C8, C9, U4 AND U5.
12. FOR RESISTANCE PROGRMMING: SEE 4850-410-1. DELETE R4 AND R5, ADD R71 AND R72.
11. FOR SERVO OUTPUTS: 130V IS STD. USE 4850-702-2 FOR 1Ø OR 4850-702-3 FOR 3Ø. SEE W.T.T.

REQD PER ASSY	PART NUMBER	PART NAME	MATERIAL — SPECIFICATION			

SCHEMATIC, A2
PHASE AND SERVO OUTPUT
850T / 853T / 855T

GALIDO

4850-078 D

NONE 1 1

REPLACEABLE PARTS

7.1 GENERAL

This section contains ordering information and complete list of replaceable parts. Parts are listed by major assembly in alphanumerical order of their reference designators. Description, manufacturers' part number, manufacturers' code ident number (see Appendix A for list of manufacturers), and California Instruments' stock number are indicated.

7.2 ORDERING INFORMATION

In order to provide our customers with prompt service on replacement parts, please provide the following information, when applicable, for each part ordered:

a) Model number and serial number of the instrument.

b) California Instruments part number of the sub-assembly where component is located.

c) Component reference designator.

d) Component description.

e) Component manufacturer's number and code ident.

f) California Instruments stock number.

All replacement parts orders should be placed with California Instruments, Division of Amstar Technical Products Co., Inc., San Diego, California, 92111-1266.

7.3 COMPUTER GENERATED PARTS LISTS

The following information is included as an explanation of the computer formatted parts list column.

7.3.1 "Seq. No." - Sequence number; the reference designator or the component, or (if there is no reference designator) the balloon number (bubble or "find" number) on the face of the assembly drawing or the top assembly drawing. They are listed in alphanumerical order.

7.3.2 "Component Item No." - This is California Instruments part number. Please use this number when ordering spares.

7.3.3 "Description, Truncated" - A brief description of the item. Abbreviations are per MIL-STD-12 or industry accepted standards.

7.3.4 "Engineering Drawing No." - This is used for one of the following:

a) The document/specification number generated by California Instruments to control the part.

b) The generic part number (military specification or industry accepted standard).

c) The primary vendor's catalog part number. An asterisk at the end of the number indicates number is longer than that shown (contact California Instruments if the full number is required).

7.3.5 "Vendor" - This is the FSCM code identification (see Appendix A).

7.3.6 "Quan" and "U/M" - The requirements per unit of measure such as: "2 each"; "1 lb."; "4 oz."; or "6 SI" (square inches).

PARTS LIST

PL NO. 4855-410-1

REV. A

SHT. 1 OF 2

REMARKS:

CALIFORNIA INSTRUMENTS

CODE IDENT 16067

DESCRIPTION 855T-1-3187

SEQ NO.	ITEM NO.	DESCRIPTION	ENG'G DWG NO.	VENDOR	QTY	TOTAL REQD	QTY ISSUED	QTY SHORT
	= DELETE FROM STD		855T-1			= DELETE =		
A1U10	360236	IC, VOLTAGE REG	LM78L10ACE	27014	1			
	210191	KNOB	P.S.-700-2-BLK	21604	1			
	= ADD TO STD 855T-1 =						ADD =	
A1U10	360214	IC, VOLTAGE REG	LH0070-2H	27014	1			
	240209	SHAFT LOCK	181	83330	1			

PARTS LIST	PL NO. 4855-410-1	REV. A	SHT. 2 OF 2
CALIFORNIA INSTRUMENTS	CODE IDENT 16067	DESCRIPTION 855T-1-3187	REMARKS:

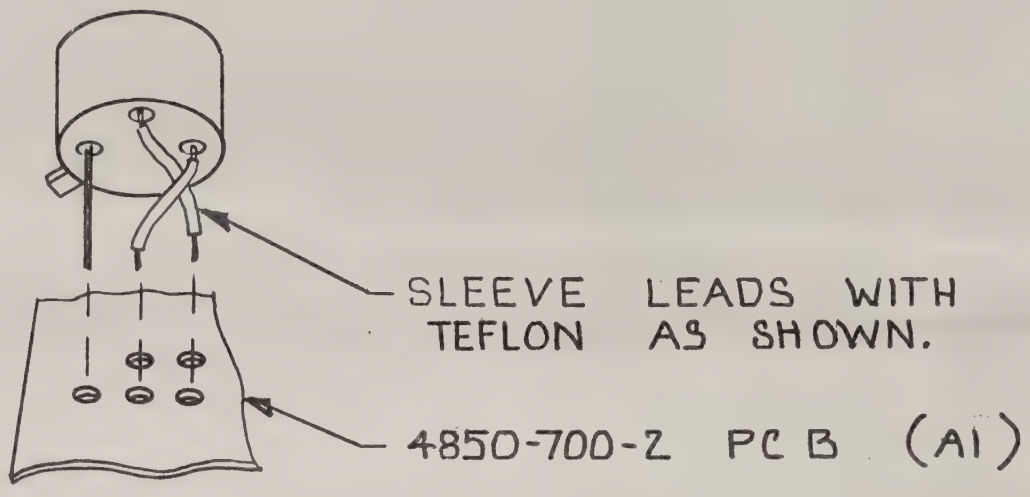

MODIFY A1U10 (LH0070-2H)
AS SHOWN BEFORE SOLDERING
SCALE NONE

PARENT ITEM NO.
4850-400-1

TOP ASSY,850T-1PH
ENGR DRAW # 4850-400 REV F

11/13/84

SEQ NO.	COMPONENT ITEM NO.	DESCRIPTION TRUNCATED	ENGINEERING DRAWING NUMBER	VENDOR	QTY	UM
A1	4850-700-1	PC ASSY,OSCILLATOR	4850-700 REV R	16067	1.0	EA
R1	510068	RES,CARB,1/4W,4.7K OHM	RC07GF472J	81349	1.0	EA
12	110598-1	PANEL,FRONT W/4850-100	4850-200-1	16067	1.0	EA
14	110699	FRAME,PLUG-IN	4850-201-7	16067	2.0	EA
16	210650	KNOB,BLK,CLR SKT #-C	PS-70TSL-2-BLK#	21604	4.0	EA
18	210191	KNOB,BLK,IND	PS-70D-2-BLK	21604	2.0	EA
20	210187	NUT,HEX,NKL,3/8-32	1199	83330	6.0	EA
23	FS1013	SCREW,PNH,S/S,4-40X3/8	MS51597-15	81349	1.0	EA
24	FS1083	SCREW,CTG,PNH,CAD,#4X3/8	#4X3/8 TYPE B	81349	8.0	EA
25	210076	INSULATOR,SHLDR,NYL,#4	NY04-040	08289	1.0	EA
26	FS1072	WASHER,SPLT,S/S,#4	MS35338-135	81349	5.0	EA
27	FS1066	NUT,HEX,S/S,4-40	MS35649-244	81349	1.0	EA
28	570128	POT,PNL,10K,1/2W,PREC	84010-012-1	16067	1.0	EA
30	240478	SWITCH,RTRY,3 3POS	47862-5M(REV A)	82104	1.0	EA
32	210474	INSULATOR,RECT,MICA	4673	91833	1.0	EA
33	FS4001	THERMAL COMPOUND	THERMALCOTE	13103	.1	OZ
34	240325	FSTNR,CAPTIVE SCREW	51-28-506-24	94222	2.0	EA

PARENT ITEM NO. 4850-400-3

TOP ASSY,850T-3PH
ENGR DRAW # 4850-400 REV F

11/13/84

SEQ NO.	COMPONENT ITEM NO.	DESCRIPTION TRUNCATED	ENGINEERING DRAWING NUMBER	VENDOR	QTY	UM
A1	4850-700-1	PC ASSY,OSCILLATOR	4850-700 REV R	16067	1.0	EA
A2	4850-702-1	PC ASSY,PHASE	4850-702 REV E1	16067	1.0	EA
R1	510068	RES,CARB,1/4W,4.7K OHM	RC07GF472J	81349	1.0	EA
12	110598-1	PANEL,FRONT W/4850-100	4850-200-1	16067	1.0	EA
14	110699	FRAME,PLUG-IN	4850-201-7	16067	2.0	EA
16	210650	KNOB,BLK,CLR SKT #-C	PS-70TSL-2-BLK#	21504	4.0	EA
18	210191	KNOB,BLK,IND	PS-700-2-BLK	21604	2.0	EA
20	210187	NUT,HEX,NKL,3/8-32	1199	83330	6.0	EA
23	FS1013	SCREW,PNH,S/S,4-40X3/8	MS51597-15	81349	1.0	EA
24	FS1083	SCREW,CTG,PNH,CAD,#4X3/8	#4X3/8 TYPE B	81349	8.0	EA
25	210076	INSULATOR,SHLDR,NYL,#4	NY04-040	08289	1.0	EA
26	FS1072	WASHER,SPLT,S/S,#4	MS35338-135	81349	5.0	EA
27	FS1066	NUT,HEX,S/S,4-40	MS35649-244	81349	1.0	EA
28	570128	POT,PNL,10K,1/2W,PREC	B4010-012-1	16067	1.0	EA
30	240478	SWITCH,RTRY,3 3POS	47362-5M(REV A)	82104	1.0	EA
32	210474	INSULATOR,RECT,MICA	4673	91833	1.0	EA
33	FS4001	THERMAL COMPOUND	THERMALCOTE	13103	.1	OZ
34	240325	FSTNR,CAPTIVE SCREW	51-28-506-24	94222	2.0	EA

PARENT ITEM NO. 4855-400-1 | DESCRIPTION TOP ASSY,855T-1PH | ENGR DRAW 4855-400 REV A1 | PAGE 1

SEQ NO.	COMPONENT ITEM NO.	DESCRIPTION TRUNCATED	ENGINEERING DRAWING NUMBER	VENDOR	QTY	UM
A1	4850-700-2	PC ASSY,OSCILLATOR	4850-700 REV N3	16067	1.0	EA
R29	570128	POT,PNL,10K,1/2W,PREC	B4010-012-1	16067	1.0	EA
12	110715-2	PANEL,FRONT W/4850-101	4850-200-2	16067	1.0	EA
14	110699	FRAME,PLUG-IN	4850-201-7	16067	2.0	EA
18	210191	KNOB,BLK,IND	PS-70D-2-BLK	21604	1.0	EA
20	210187	NUT,HEX,NKL,3/8-32	1199	83330	1.0	EA
23	FS1013	SCREW,PNH,S/S,4-40X3/8	MS51597-15	81349	1.0	EA
24	FS1083	SCREW,CTG,PNH,CAD,# X3/8	# X3/8 TYPE B	81349	8.0	EA
25	210076	INSULATOR,SHLDR,NYL,#4	NY04-040	08289	1.0	EA
26	FS1072	WASHER,SPLT,S/S,#4	MS35338-135	81349	5.0	EA
27	FS1066	NUT,HEX,S/S,4-40	MS35649-244	81349	1.0	EA
32	210474	INSULATOR,RECT,MICA	4673	91833	1.0	EA
33	FS4001	THERMAL COMPOUND	THERMALCOTE	13103	.1	OZ
34	240325	FSTNR,CAPTIVE SCREW	51-28-506-24	94222	2.0	EA

PARENT ITEM NO. 4855-400-3 DESCRIPTION TOP ASSY,855T-3PH ENGR DRAW 4855-400 REV A1

SEQ NO.	COMPONENT ITEM NO.	DESCRIPTION TRUNCATED	ENGINEERING DRAWING NUMBER	VENDOR	QTY	UM
A1	4850-700-2	PC ASSY,OSCILLATOR	4850-700 REV N3	16067	1.0	EA
A2	4850-702-1	PC ASSY,PHASE	4850-702 REV E1	16067	1.0	EA
R29	570128	POT,PNL,10K,1/2W,PREC	B4010-012-1	16067	1.0	EA
12	110715	PANEL,FRONT	4850-200-9	16067	1.0	EA
14	110699	FRAME,PLUG-IN	4850-201-7	16067	2.0	EA
18	210191	KNOB,BLK,IND	PS-700-2-BLK	21604	1.0	EA
20	210187	NUT,HEX,NKL,3/8-32	1199	83330	1.0	EA
23	FS1013	SCREW,PNH,S/S,4-40X3/8	MS51597-15	81349	1.0	EA
24	FS1083	SCREW,CTG,PNH,CAD,# X3/8	# X3/8 TYPE B	81349	1.0	EA
25	210076	INSULATOR,SHLDR,NYL,#4	NY04-040	08289	1.0	EA
26	FS1072	WASHER,SPLT,S/S,#4	MS35338-135	81349	5.0	EA
27	FS1066	NUT,HEX,S/S,4-40	MS35649-244	81349	1.0	EA
32	210474	INSULATOR,RECT,MICA	4673	91833	1.0	EA
33	FS4001	THERMAL COMPOUND	THERMALCOTE	13103	1.0	OZ
34	240325	FSTNR,CAPTIVE SCREW	51-28-506-24	94222	2.0	EA

EQ NO.	COMPONENT ITEM NO.	DESCRIPTION TRUNCATED	ENGINEERING DRAWING NUMBER	VENDOR	QTY	UM
CR1	310173	DIODE,ZNR,16V,.5W,5%	1N5246B	04713	1.0	EA
CR2	310173	DIODE,ZNR,16V,.5W,5%	1N5246B	04713	1.0	EA
CR3	310062	DIODE,RECT,1A,400V,DO41	1N4004	04713	1.0	EA
CR4	310062	DIODE,RECT,1A,400V,DO41	1N4004	04713	1.0	EA
CR5	250212	LAMP,LED,RED	LSL-3L	0000S	1.0	EA
CR6	310227	DIODE,SWNG,75V,.5W,DO35	1N4148	07263	1.0	EA
CR7	310227	DIODE,SWNG,75V,.5W,DO35	1N4148	07263	1.0	EA
C1	611060	CAP,CER,1000PF,100V	C22A102K	71590	1.0	EA
C2	610916	CAP,MYLAR,.1UF,250V	C280AE/A100K	80031	1.0	EA
C3	610094	CAP,CER,.01UF,50V	CK103	71590	1.0	EA
C4	610094	CAP,CER,.01UF,50V	CK103	71590	1.0	EA
C5	610094	CAP,CER,.01UF,50V	CK103	71590	1.0	EA
C6	610094	CAP,CER,.01UF,50V	CK103	71590	1.0	EA
C7	610918	CAP,VAR,.8-8.5PF	TP9G	18736	1.0	EA
C8	610015	CAP,MICA,50PF,500V	DM15-500J	72136	1.0	EA
C9	610004	CAP,MICA,10PF,500V	CM05C100J03	81349	1.0	EA
C10	610027	CAP,MICA,100PF,500V	CM05F101J03	81349	1.0	EA
C11	610008	CAP,MICA,20PF,500V	CM05E200J03	81349	1.0	EA
C15	610802	CAP,TANT,4.7UF,25V	T362B475M025AS	05397	1.0	EA
C16	610916	CAP,MYLAR,.1UF,250V	C280AE/A100K	80031	1.0	EA
C17	610916	CAP,MYLAR,.1UF,250V	C280AE/A100K	80031	1.0	EA
C19	610620	CAP,MICA,250PF,500V	CM05F251J03	81349	1.0	EA
C20	610050	CAP,MICA,820PF,300V	CM05F821J03	81349	1.0	EA
C21	611056	CAP,AL,3300UF,16V	16T3300	30039	1.0	EA
C22	610094	CAP,CER,.01UF,50V	CK103	71590	1.0	EA
[illegible]	610094	CAP,CER,.01UF,50V	CK103	71590	1.0	EA
[illegible]	610094	CAP,CER,.01UF,50V	CK103	71590	1.0	EA
[illegible]	610094	CAP,CER,.01UF,50V	CK103	71590	1.0	EA
[illegible]	610094	CAP,CER,.01UF,50V	CK103	71590	1.0	EA
L1	590005	INDUCTOR,RF,200UH	1537-90	99800	1.0	EA
Q1	330285	TRANSISTOR,SS,PNP,TO92	PN2907A	07263	1.0	EA
Q2	330285	TRANSISTOR,SS,PNP,TO92	PN2907A	07263	1.0	EA
Q3	330245	TRANSISTOR,FET,N,JFET	2N5246	81349	1.0	EA
Q4	330288	TRANSISTOR,SS,PNP,TO92	PE8550	07263	1.0	EA
Q5	330289	TRANSISTOR,SS,NPN,TO92	PE8050	07263	1.0	EA
Q6	330284	TRANSISTOR,SS,NPN,TO92	PN2222A	07263	1.0	EA
Q7	330308	TRANSISTOR,FET,N,DMOS	CIC376	16067	1.0	EA
Q8	330284	TRANSISTOR,SS,NPN,TO92	PN2222A	07263	1.0	EA
R1	570265	POT,1T,PC,100K	63P104	02111	1.0	EA
R2	510130	RES,CARB,1/4W,4.7M OHM	RC07GF475J	81349	1.0	EA
R3	510090	RES,CARB,1/4W,39K OHM	RC07GF393J	81349	1.0	EA
R4	510130	RES,CARB,1/4W,4.7M OHM	RC07GF475J	81349	1.0	EA
R5	510092	RES,CARB,1/4W,47K OHM	RC07GF473J	81349	1.0	EA
R6	570265	POT,1T,PC,100K	63P104	02111	1.0	EA
R7	360241	RES,ARRAY,DIP,10K	898-1-R10K-F	73138	1.0	EA
R8	510076	RES,CARB,1/4W,10K OHM	RC07GF103J	81349	1.0	EA
R10	510100	RES,CARB,1/4W,100K OHM	RC07GF104J	81349	1.0	EA
R11	510068	RES,CARB,1/4W,4.7K OHM	RC07GF472J	81349	1.0	EA
R12	510053	RES,CARB,1/4W,1K OHM	RC07GF102J	81349	1.0	EA

SEQ NO.	COMPONENT ITEM NO.	DESCRIPTION TRUNCATED	ENGINEERING DRAWING NUMBER	VENDOR	QTY	UM
R13	510076	RES,CARB,1/4W,10K OHM	RC07GF103J	81349	1.0	EA
R14	530004	RES,CARB,1W,68 OHM	RC32GF680J	81349	1.0	EA
R15	510053	RES,CARB,1/4W,1K OHM	RC07GF102J	81349	1.0	EA
R16	530068	RES,CARB,1W,47 OHM	RC32GF470J	81349	1.0	EA
R17	510053	RES,CARB,1/4W,1K OHM	RC07GF102J	81349	1.0	EA
R18	560575	RES,FILM,1/8W,33.2K,1%	RN55D3322F	81349	1.0	EA
R19	560747	RES,FILM,1/8W,8.66K,1%	RN55D8661F	81349	1.0	EA
R20	510100	RES,CARB,1/4W,100K OHM	RC07GF104J	81349	1.0	EA
R21	510076	RES,CARB,1/4W,10K OHM	RC07GF103J	81349	1.0	EA
R22	510100	RES,CARB,1/4W,100K OHM	RC07GF104J	81349	1.0	EA
R23	510029	RES,CARB,1/4W,100 OHM	RC07GF101J	81349	1.0	EA
R24	570265	POT,1T,PC,100K	63P104	02111	1.0	EA
R25	570266	POT,1T,PC,500 OHM	63P501	02111	1.0	EA
R26	560748	RES,FILM,1/8W,4.53K,1%	RN55D4531F	81349	1.0	EA
R27	360232	RES,ARRAY,TFLM,DIP,6.8K	698-3-R6.8K-F	73138	1.0	EA
R28	510068	RES,CARB,1/4W,4.7K OHM	RC07GF472J	81349	1.0	EA
R30	510037	RES,CARB,1/4W,220 OHM	RC07GF221J	81349	1.0	EA
R32	510084	RES,CARB,1/4W,22K OHM	RC07GF223J	81349	1.0	EA
R33	360154	RES,ARRAY,SIP,22K	108A223	01121	1.0	EA
R35	510064	RES,CARB,1/4W,3.3K OHM	RC07GF332J	81349	1.0	EA
R36	510005	RES,CARB,1/4W,10 OHM	RC07GF100J	81349	1.0	EA
R39	510005	RES,CARB,1/4W,10 OHM	RC07GF100J	81349	1.0	EA
R40	510029	RES,CARB,1/4W,100 OHM	RC07GF101J	81349	1.0	EA
R45	510053	RES,CARB,1/4W,1K OHM	RC07GF102J	81349	1.0	EA
R46	510029	RES,CARB,1/4W,100 OHM	RC07GF101J	81349	1.0	EA
S3	240477	SWITCH,RTRY,10 POS	1197S4P/REL-10	82104	1.0	EA
S4	240477	SWITCH,RTRY,10 POS	1197S4P/REL-10	82104	1.0	EA
S5	240477	SWITCH,RTRY,10 POS	1197S4P/REL-10	82104	1.0	EA
S6	240477	SWITCH,RTRY,10 POS	1197S4P/REL-10	82104	1.0	EA
TP1	250303	TERMINAL,MINIWRAP POST	T44	82893	1.0	EA
TP2	250303	TERMINAL,MINIWRAP POST	T44	82893	1.0	EA
TP3	250303	TERMINAL,MINIWRAP POST	T44	82893	1.0	EA
T1	710324	TRANSFORMER	PC16-540-1	06779	1.0	EA
U1	360233	IC,TTL,RATE MULT,BCD	SN74167N	81349	1.0	EA
U2	360233	IC,TTL,RATE MULT,BCD	SN74167N	81349	1.0	EA
U3	360233	IC,TTL,RATE MULT,BCD	SN74167N	81349	1.0	EA
U4	360233	IC,TTL,RATE MULT,BCD	SN74167N	81349	1.0	EA
U5	360161	IC,TTL,FF,DUAL	SN74LS74N	81349	1.0	EA
U6	360234	IC,TIMER,DUAL	NE556N	18324	1.0	EA
U7	360465	IC,TTL,INVERT,HEX	74ALS04	81349	1.0	EA
U8	360235	IC,TTL,NAND,4-IN,DUAL	SN74LS20N	81349	1.0	EA
U9	360032	IC,VOLTAGE REG,+5,1A	LM340-5T	27014	1.0	EA
U10	360236	IC,VOLTAGE REG,+10,.1A	LM78L10ACE	27014	1.0	EA
U11	360226	IC,TTL,COUNTER,DEC,DUAL	SN74LS390N	81349	1.0	EA
U12	360237	IC,OP-AMP,PREC	CA3193E	18722	1.0	EA
U13	360238	IC,TTL,COUNTER,BIN,UP/DN	SN74LS169N	81349	1.0	EA
U14	360238	IC,TTL,COUNTER,BIN,UP/DN	SN74LS169N	81349	1.0	EA
U15	360213	IC,OP-AMP,FET,DUAL	LF353N	27014	1.0	EA
U16	360270	IC,OP-AMP,DUAL,GP	LM1458N	27014	1.0	EA

SEQ NO.	COMPONENT ITEM NO.	DESCRIPTION TRUNCATED	ENGINEERING DRAWING NUMBER	VENDOR	QTY	UM
U17	CIC207-3	IC,TTL,PROM,256X4	CIC207-3	16067	1.0	EA
U18	360238	IC,TTL,COUNTER,BIN,UP/DN	SN74LS169N	81349	1.0	EA
U19	CIC207-2	IC,TTL,PROM,256X4	CIC207-2	16067	1.0	EA
U20	360239	IC,TTL,EXCL NOR,2-IN,OC	SN74LS266N	81349	1.0	EA
U21	360240	IC,DAC,8-BIT,.19%	DAC-08EN	18324	1.0	EA
U22	360239	IC,TTL,EXCL NOR,2-IN,OC	SN74LS266N	81349	1.0	EA
Y1	250332	CRYSTAL,10.2M,.005%	HC33U PARALLEL*	000AH	1.0	EA
7	160306	PWB,OSCILLATOR	4850-750-1	16067	1.0	EA
150	230057	SOCKET,DIP,16 PIN	IC3-163-S8-T	06776	2.0	EA
152	240294	SOCKET,XSTR,4 PIN,TO5/18	05-3308	83486	1.0	EA
154	120027	DECAL,HIGH VOLTAGE 2X.7"	DANGER	16067	1.0	EA

PARENT ITEM NO. 4850-700-2 DESCRIPTION PC ASSY,OSCILLATOR ENGR DRAW 4850-700 REV N4

SEQ NO.	COMPONENT ITEM NO.	DESCRIPTION TRUNCATED	ENGINEERING DRAWING NUMBER	VENDOR	QTY	UM
CR1	310173	DIODE,ZNR,16V,.5W,5%	1N5246B	04713	1.0	EA
CR2	310173	DIODE,ZNR,16V,.5W,5%	1N5246B	04713	1.0	EA
CR3	310062	DIODE,RECT,1A,400V,D041	1N4004	04713	1.0	EA
CR4	310062	DIODE,RECT,1A,400V,D041	1N4004	04713	1.0	EA
CR6	310227	DIODE,SWNG,75V,.5W,D035	1N4148	07263	1.0	EA
CR7	310227	DIODE,SWNG,75V,.5W,D035	1N4148	07263	1.0	EA
C5	610094	CAP,CER,.01UF,50V	CK103	71590	1.0	EA
C6	610094	CAP,CER,.01UF,50V	CK103	71590	1.0	EA
C7	610918	CAP,VAR,.8-8.5PF	TP96	18736	1.0	EA
C8	610015	CAP,MICA,50PF,500V	DM15-500J	72136	1.0	EA
C9	610004	CAP,MICA,10PF,500V	CM05C100J03	81349	1.0	EA
C10	610027	CAP,MICA,100PF,500V	CM05F101J03	81349	1.0	EA
C11	610008	CAP,MICA,20PF,500V	CM05E200J03	81349	1.0	EA
C15	610802	CAP,TANT,4.7UF,25V	T362B475M025AS	05397	1.0	EA
C16	610916	CAP,MYLAR,.1UF,250V	C280AE/A100K	80031	1.0	EA
C17	610916	CAP,MYLAR,.1UF,250V	C280AE/A100K	80031	1.0	EA
C19	610620	CAP,MICA,250PF,500V	CM05F251J03	81349	1.0	EA
C20	610050	CAP,MICA,820PF,300V	CM05F821J03	81349	1.0	EA
C21	611056	CAP,AL,3300UF,16V	16T3300	30059	1.0	EA
C22	610094	CAP,CER,.01UF,50V	CK103	71590	1.0	EA
C23	610094	CAP,CER,.01UF,50V	CK103	71590	1.0	EA
C24	610094	CAP,CER,.01UF,50V	CK103	71590	1.0	EA
C25	610094	CAP,CER,.01UF,50V	CK103	71590	1.0	EA
C26	610094	CAP,CER,.01UF,50V	CK103	71590	1.0	EA
L1	590005	INDUCTOR,RF,2000UH	1537-90	99800	1.0	EA
Q3	330245	TRANSISTOR,FET,N,JFET	2N5246	81349	1.0	EA
Q4	330266	TRANSISTOR,SS,PNP,TO92	PE8550	07263	1.0	EA
Q5	330269	TRANSISTOR,SS,NPN,TO92	PE8050	07263	1.0	EA
Q7	330306	TRANSISTOR,FET,N,DMOS	CIC376	16067	1.0	EA
Q8	330264	TRANSISTOR,SS,NPN,TO92	PN2222A	07263	1.0	EA
R7	360241	RES,ARRAY,DIP,10K	898-1-R10K-F	73138	1.0	EA
R8	510076	RES,CARB,1/4W,10K OHM	RC07GF103J	81349	1.0	EA
R10	510100	RES,CARB,1/4W,100K OHM	RC07GF104J	81349	1.0	EA
R11	510068	RES,CARB,1/4W,4.7K OHM	RC07GF472J	81349	1.0	EA
R12	510053	RES,CARB,1/4W,1K OHM	RC07GF102J	81349	1.0	EA
R14	530004	RES,CARB,1W,68 OHM	RC32GF680J	81349	1.0	EA
R15	510053	RES,CARB,1/4W,1K OHM	RC07GF102J	81349	1.0	EA
R16	530068	RES,CARB,1W,47 OHM	RC32GF470J	81349	1.0	EA
R17	510053	RES,CARB,1/4W,1K OHM	RC07GF102J	81349	1.0	EA
R18	560575	RES,FILM,1/8W,33.2K,1%	RN55D3322F	81349	1.0	EA
R19	560747	RES,FILM,1/8W,5.66K,1%	RN55D8661F	81349	1.0	EA
R20	510100	RES,CARB,1/4W,100K OHM	RC07GF104J	81349	1.0	EA
R21	510076	RES,CARB,1/4W,10K OHM	RC07GF103J	81349	1.0	EA
R22	510100	RES,CARB,1/4W,100K OHM	RC07GF104J	81349	1.0	EA
R23	510029	RES,CARB,1/4W,100 OHM	RC07GF101J	81349	1.0	EA
R24	570265	POT,1T,PC,100K	63P104	02111	1.0	EA
R25	570266	POT,1T,PC,500 OHM	63P501	02111	1.0	EA
R26	560748	RES,FILM,1/8W,4.53K,1%	RN55D4531F	81349	1.0	EA
R27	360232	RES,ARRAY,TFLM,DIP,6.8K	698-3-R6.8K-F	73138	1.0	EA

PARENT ITEM NO. DESCRIPTION PC ASSY,OSCILLATOR
4850-700-2 ENGR DRAW 4850-700 REV N4

SEQ NO.	COMPONENT ITEM NO.	DESCRIPTION TRUNCATED	ENGINEERING DRAWING NUMBER	VENDOR	QTY	UM
R28	510068	RES,CARB,1/4W,4.7K OHM	RC07GF472J	81349	1.0	EA
R32	510084	RES,CARB,1/4W,22K OHM	RC07GF223J	81349	1.0	EA
R33	360154	RES,ARRAY,SIP,22K	106A223	01121	1.0	EA
R35	510064	RES,CARB,1/4W,3.3K OHM	RC07GF332J	81349	1.0	EA
R36	510005	RES,CARB,1/4W,10 OHM	RC07GF100J	81349	1.0	EA
R39	510005	RES,CARB,1/4W,10 OHM	RC07GF100J	81349	1.0	EA
R45	510053	RES,CARB,1/4W,1K OHM	RC07GF102J	81349	1.0	EA
R46	510029	RES,CARB,1/4W,100 OHM	RC07GF101J	81349	1.0	EA
S1	240475	SWITCH,DIP,8 SECT	206-8-LPST	71450	1.0	EA
S2	240475	SWITCH,DIP,8 SECT	206-8-LPST	71450	1.0	EA
TP1	250303	TERMINAL,MINIWRAP POST	T44	82893	1.0	EA
TP2	250303	TERMINAL,MINIWRAP POST	T44	82893	1.0	EA
TP3	250303	TERMINAL,MINIWRAP POST	T44	82893	1.0	EA
T1	710324	TRANSFORMER	PC16-640-1	06779	1.0	EA
U1	360233	IC,TTL,RATE MULT,BCD	SN74167N	81349	1.0	EA
U2	360233	IC,TTL,RATE MULT,BCD	SN74167N	81349	1.0	EA
U3	360233	IC,TTL,RATE MULT,BCD	SN74167N	81349	1.0	EA
U4	360233	IC,TTL,RATE MULT,BCD	SN74167N	81349	1.0	EA
U7	360159	IC,TTL,INVERT,HEX	SN74LS04N	81349	1.0	EA
U8	360235	IC,TTL,NAND,4-IN,DUAL	SN74LS20N	81349	1.0	EA
U9	360032	IC,VOLTAGE REG,+5,1A	LM340-5T	27014	1.0	EA
U10	360236	IC,VOLTAGE REG,+10,.1A	LM78L10ACE	27014	1.0	EA
U11	360226	IC,TTL,COUNTER,DEC,DUAL	SN74LS390N	81349	1.0	EA
U12	360237	IC,OP-AMP,PREC	CA3193E	13722	1.0	EA
U13	360238	IC,TTL,COUNTER,BIN,UP/DN	SN74LS169N	81349	1.0	EA
U14	360238	IC,TTL,COUNTER,BIN,UP/DN	SN74LS169N	81349	1.0	EA
U15	360213	IC,OP-AMP,FET,DUAL	LF353N	27014	1.0	EA
U16	360270	IC,OP-AMP,DUAL,GP	LM1458N	27014	1.0	EA
U17	CIC207-3	IC,TTL,PROM,256X4	CIC207-3	16067	1.0	EA
U18	360238	IC,TTL,COUNTER,BIN,UP/DN	SN74LS169N	81349	1.0	EA
U19	CIC207-2	IC,TTL,PROM,256X4	CIC207-2	16067	1.0	EA
U20	360239	IC,TTL,EXCL NOR,2-IN,OC	SN74LS266N	81349	1.0	EA
U21	360240	IC,DAC,8-BIT,.19%	DAC-08EN	18324	1.0	EA
U22	360239	IC,TTL,EXCL NOR,2-IN,OC	SN74LS266N	81349	1.0	EA
Y1	250332	CRYSTAL,10.2M,.005%	HC33U PARALLEL#	00OAH	1.0	EA
7	160306	PWB,OSCILLATOR	4850-750-1	16067	1.0	EA
150	230057	SOCKET,DIP,16 PIN	ICB-163-S6-T	06776	2.0	EA
152	240294	SOCKET,XSTR,4 PIN,TO5/18	05-3308	83486	1.0	EA
154	120027	DECAL,HIGH VOLTAGE 2X.7"	DANGER	16067	1.0	EA

PARENT ITEM NO. 4850-702-1 DESCRIPTION PC ASSY,PHASE ENGR DRAW 4850-702-1

SEQ NO.	COMPONENT ITEM NO.	DESCRIPTION TRUNCATED	ENGINEERING DRAWING NUMBER	VENDOR	QTY	UM
C1	610094	CAP,CER,.01UF,50V	CK103	71590	1.0	EA
C2	610094	CAP,CER,.01UF,50V	CK103	71590	1.0	EA
C4	610094	CAP,CER,.01UF,50V	CK103	71590	1.0	EA
C5	610094	CAP,CER,.01UF,50V	CK103	71590	1.0	EA
C6	610094	CAP,CER,.01UF,50V	CK103	71590	1.0	EA
C8	610050	CAP,MICA,820PF,500V	CM05F821J03	81349	1.0	EA
C9	610620	CAP,MICA,250PF,500V	CM05F251J03	81349	1.0	EA
C10	610916	CAP,MYLAR,.1UF,250V	C280AE/A100K	80031	1.0	EA
C11	610916	CAP,MYLAR,.1UF,250V	C280AE/A100K	80031	1.0	EA
J1	250339	CABLE ASSY,FLEX,15COND6"	J-15-24-1-U-6.0	08261	1.0	EA
Q1	330308	TRANSISTOR,FET,N,DMOS	CIC376	16067	1.0	EA
R1	360241	RES,ARRAY,DIP,10K	898-1-R10K-F	73138	1.0	EA
R2	510053	RES,CARB,1/4W,1K OHM	RC07GF102J	81349	1.0	EA
R3	360232	RES,ARRAY,TFLM,DIP,6.8K	698-3-6.8K-F	73138	1.0	EA
R4	560716	RES,FILM,1/8W,4.64K,1%	RN55D4641F	81349	1.0	EA
R5	510068	RES,CARB,1/4W,4.7K OHM	RC07GF472J	81349	1.0	EA
R6	360232	RES,ARRAY,TFLM,DIP,6.8K	698-3-6.8K-F	73138	1.0	EA
R7	570266	POT,1T,PC,500 OHM	63P501	02111	1.0	EA
R8	560575	RES,FILM,1/8W,33.2K,1%	RN55D3322F	81349	1.0	EA
R9	510029	RES,CARB,1/4W,100 OHM	RC07GF101J	81349	1.0	EA
R10	510100	RES,CARB,1/4W,100K OHM	RC07GF104J	81349	1.0	EA
R11	570266	POT,1T,PC,500 OHM	63P501	02111	1.0	EA
R12	560747	RES,FILM,1/8W,8.66K,1%	RN55D8661F	81349	1.0	EA
R13	570265	POT,1T,PC,100K	63P104	02111	1.0	EA
R14	570266	POT,1T,PC,500 OHM	63P501	02111	1.0	EA
R15	570258	POT,1T,PC,200 OHM	63P201	02111	1.0	EA
R16	510084	RES,CARB,1/4W,22K OHM	RC07GF223J	81349	1.0	EA
R17	360154	RES,ARRAY,SIP,22K	764-1-R22K	73138	1.0	EA
R66	510005	RES,CARB,1/4W,10 OHM	RC07GF100J	81349	1.0	EA
R70	510005	RES,CARB,1/4W,10 OHM	RC07GF100J	81349	1.0	EA
R73	510053	RES,CARB,1/4W,1K OHM	RC07GF102J	81349	1.0	EA
R74	510029	RES,CARB,1/4W,100 OHM	RC07GF101J	81349	1.0	EA
R75	510029	RES,CARB,1/4W,100 OHM	RC07GF101J	81349	1.0	EA
TP3	250303	TERMINAL,MINIWRAP POST	T44	82893	1.0	EA
TP5	250303	TERMINAL,MINIWRAP POST	T44	82893	1.0	EA
TP12	250303	TERMINAL,MINIWRAP POST	T44	82893	1.0	EA
U1	360238	IC,TTL,COUNTER,BIN,UP/DN	SN74LS169N	81349	1.0	EA
U2	360238	IC,TTL,COUNTER,BIN,UP/DN	SN74LS169N	81349	1.0	EA
U3	360238	IC,TTL,COUNTER,BIN,UP/DN	SN74LS169N	81349	1.0	EA
U4	CIC207-3	IC,TTL,PROM,256X4	CIC207-3	16067	1.0	EA
U5	CIC207-2	IC,TTL,PROM,256X4	CIC207-2	16067	1.0	EA
U6	360156	IC,TTL,NAND,2-IN,QUAD	SN74LS00N	81349	1.0	EA
U7	360239	IC,TTL,EXCL NOR,2-IN,OC	SN74LS266N	81349	1.0	EA
U8	360239	IC,TTL,EXCL NOR,2-IN,OC	SN74LS266N	81349	1.0	EA
U9	360240	IC,DAC,8-BIT,.19%	NE5008N	18324	1.0	EA
U10	360213	IC,OP-AMP,FET,DUAL	LF353N	27014	1.0	EA
U11	360270	IC,OP-AMP,DUAL,GP	LM1458N	27014	1.0	EA
U12	360270	IC,OP-AMP,DUAL,GP	LM1458N	27014	1.0	EA
7	160328	PWB,PHASE/SERVO	4850-702-7	16067	1.0	EA
151	240294	SOCKET,XSTR,4 PIN,TO5/18	4596	91833	1.0	EA
152	230057	SOCKET,DIP(ICN-163-53-T)	C85-16-01	01295	2.0	EA

SECTION VIII
OPTIONS

8-1 GENERAL

8-2 This section of the manual contains information regarding all available options.

MANUAL ADDENDUM

1.0 MODEL NUMBER DESCRIPTION

All oscillators in the 85XT Series have a number that describes the frequency selection, number of servoed or unservoed outputs and method of amplitude control.
The first designation is either the 850T, 853T or 855T.

1.1 PHASE DESIGNATION

The next portion of the oscillator model number indicates the number of unservoed outputs. If the number of phases is followed by the designator "S", the outputs are servoed.

For example:

XXX-1	Single Phase
XXX-2	Two Phase (Phase C leading A by 90°)
XXX-3	Three Phase
XXX-3D	Three-Phase Open Delta (Phase C leading A by 60°)
XXX-1S	Single Phase servoed

1.2 AMPLITUDE PROGRAM

The last designator, if present, indicates the optional methods of externally programming the output amplitude.

XXX-XX-RPV	indicates programming by DC voltage.
XXV-XX-RPR	indicates programming by resistance.

2.0 MODEL 853T

2.1 GENERAL

The 853T oscillator is identical to an 855T, except any of three frequencies--50Hz, 60Hz, and 400Hz--can be selected.

2.2 THEORY OF OPERATION

Refer to Figure 6-4 in the standard 855T Instruction Manual. DIP switches S1 and S2 are removed for the 853T. Switch S1 is replaced by jumpers and S2 is wired to the front panel 50, 60, 400Hz selector switch. Refer to Figure 1 of this addendum. Range jumper W3 is installed instead of W1 to enable the 999.9Hz frequency range.

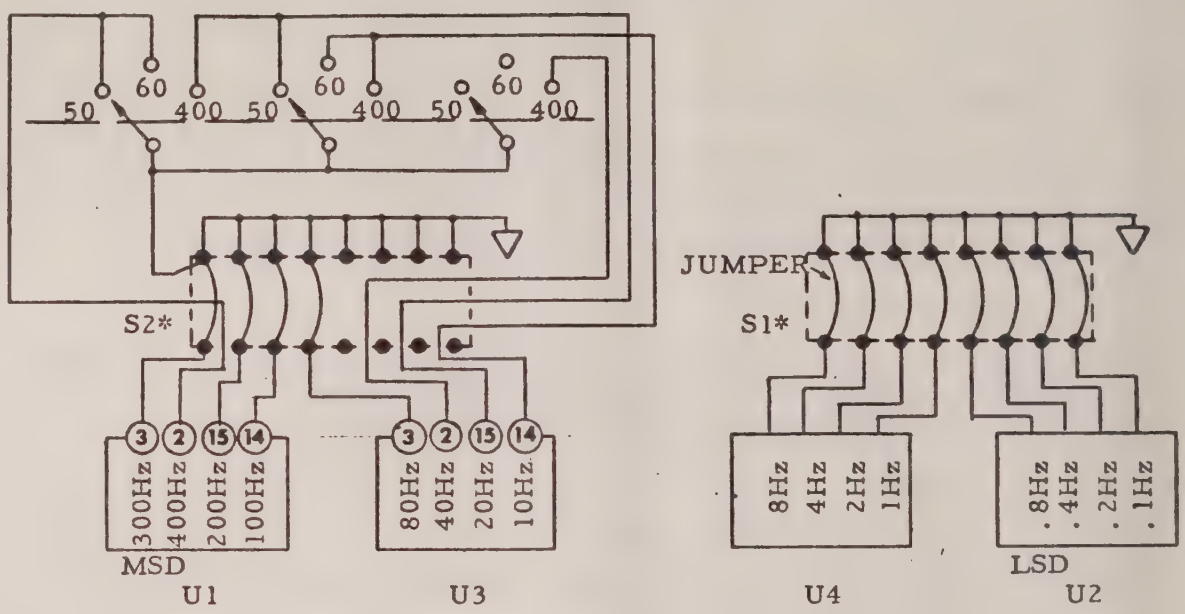

*NOTE:
S1 and S2 are removed to allow wiring to frequency selector switch
22Ω DIP resistor may be substituted for jumpers at S1 .

853T FREQUENCY PROGRAMING
FIGURE 1

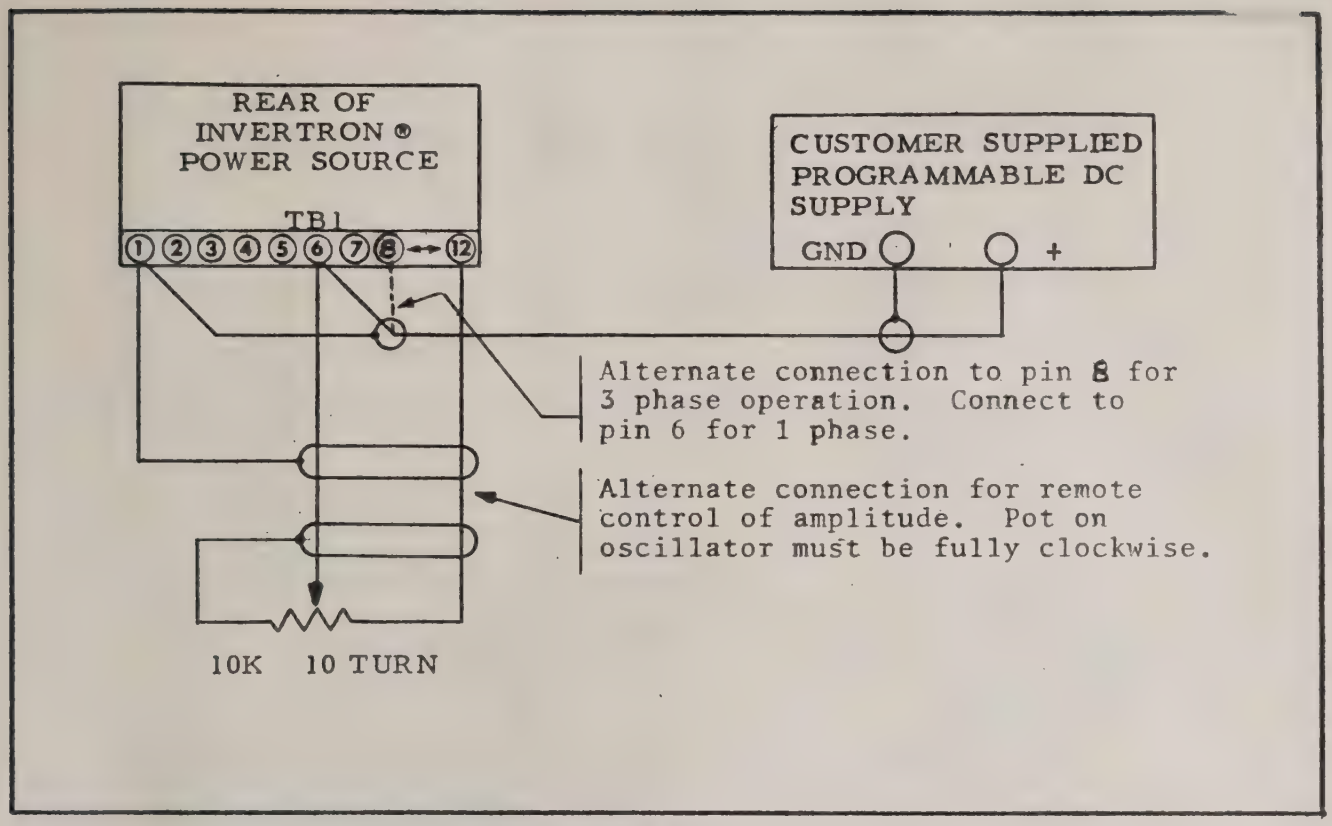

CONNECTIONS FOR DC
PROGRAMING
FIGURE 2

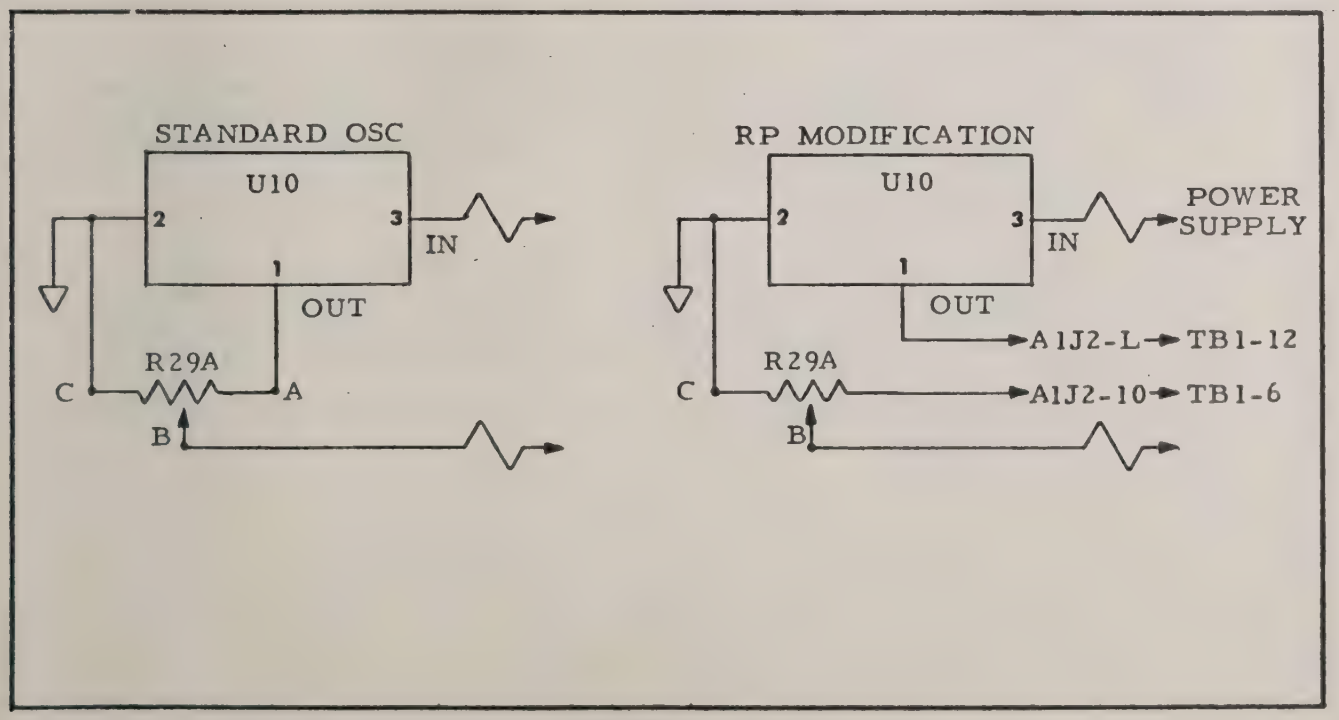

FIGURE 3

3.0 RPV OPTION

3.1 GENERAL

The RPV option allows the power system's output amplitude to be DC programmable .

3.2 SPECIFICATIONS

All standard specifications apply except for the following:

AMPLITUDE STABILITY:	Determined by DC programming source.
AMPLITUDE TEMPERATURE COEFFICIENT:	Determined by DC programming source.
DC PROGRAMMING VOLTAGE:	+30VDC MAX. into 10KΩ impedance +10VDC represents maximum oscillator output (5VRMS) with the oscillator pot full clockwise.
SLOW START:	Not functional.

3.3 PROGRAMMING

The DC programming voltage must be applied across pin 6 and pin 1 on TB1 at the rear panel of the power source. Pin 6 must be the positive input. See Figure 2 . If a DC voltage greater than +10V is to be used, the oscillator front panel AMPLITUDE control must be reduced to keep the oscillator and power source output within their operating ranges. The power source full scale output is obtained by an output of approximately 5VRMS from the oscillator.

3.4 REMOTE GAIN CONTROL

The +10Volt reference is available at pin 12 of TB1 on rear of power source and this may be used in conjunction with a 10KΩ potentiometer to control the output amplitude of the power source. See Figure 2 .

3.5 THEORY OF OPERATION

See Main Board schematic number 4850-070. Instead of R29A connecting to A1U10-1, R29A connects to A1J2-10, and A1U10-1 connects to A1J2-12. This removes A1U10, the +10 volt reference, from circuit and allows an external power supply to be substituted. See Figure 3 .

The standard slow start feature is not functional in these versions of the oscillator.

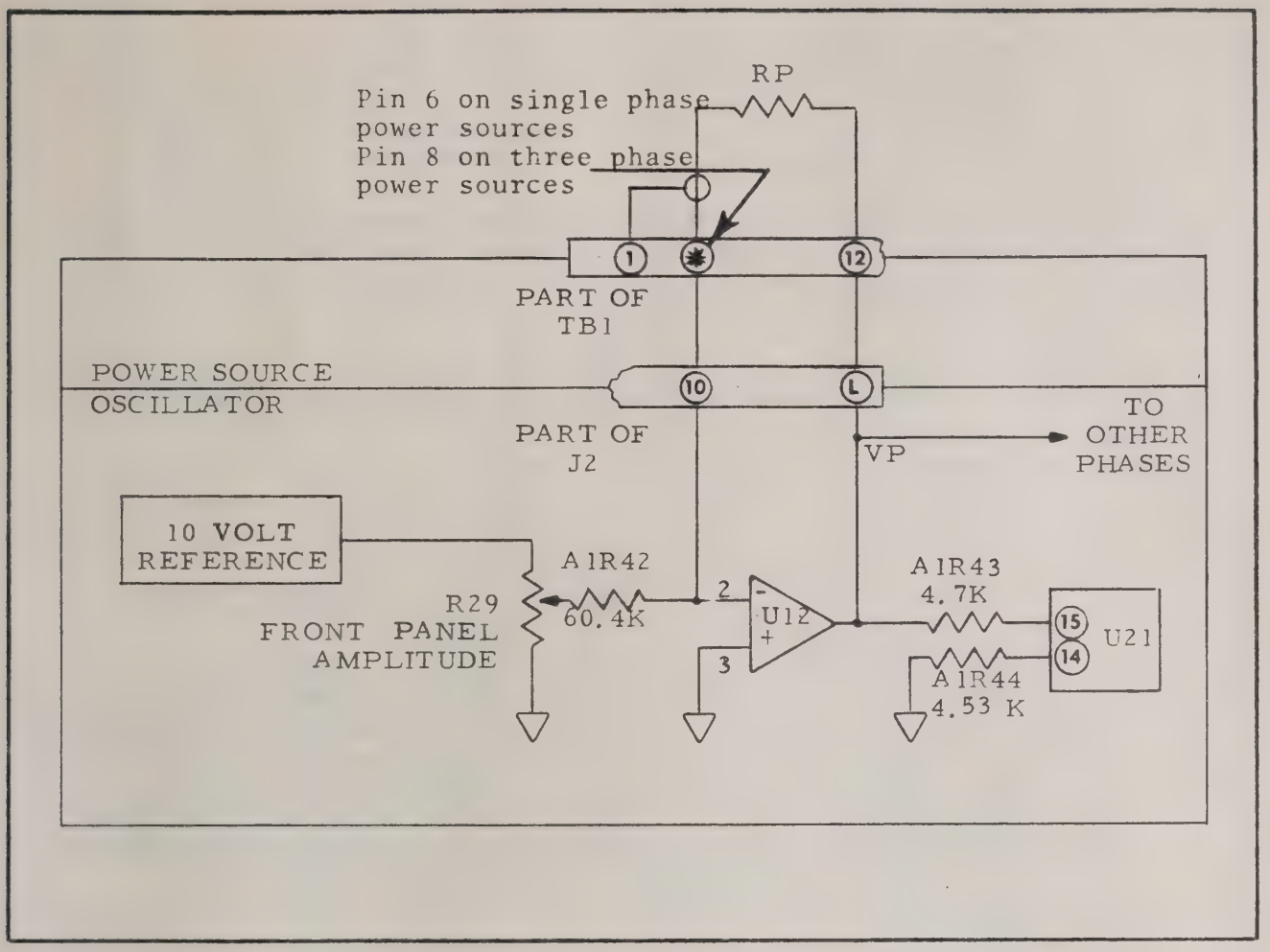

DIAGRAM OF RPR
FIGURE 4

4.0 RPR OPTION

4.1 GENERAL

The RPR option allows the output amplitude of the power system to be controlled by a variable resistance.

4.2 SPECIFICATIONS

RANGE	AMPLITUDE CONTROL (Ω/V) minimum
135/270	444/222
130/260	462/231
120/240	500/250

All other specifications are the same as the standard oscillator.

4.3 THEORY OF OPERATION

A diagram of the RPR configuration is shown in Figure 4. The operational amplifier A1U12 is operating in the inverting mode such that its output voltage Vp is proportional to the remote programming resistance Rp. The remote programming sensitivity can be increased by the setting of the oscillator amplitude control R29. Since the output of the reference amplifier U12 is negative with the RPR configuration, the "-" input of all DAC'S must receive the amplitude programming voltage.

4.4 CALIBRATION

Select a resistor that represents the full scale output voltage of the power source. (ex: Range=120, Rp=120X.5K=60K)
Connect this resistor across terminals 6 and 12 of TB1 on the rear of the power source. While monitoring the power source output voltage adjust the oscillator amplitude control and power source gain control to 120.0 Volts

5.0 SERVO OPTION

5.1 GENERAL

All model 85X series oscillators can be used with the servo option. The servo option is not available with either the RPV or RPR options . The servo option allows the power source output to be precisely regulated at a distance from the power source .

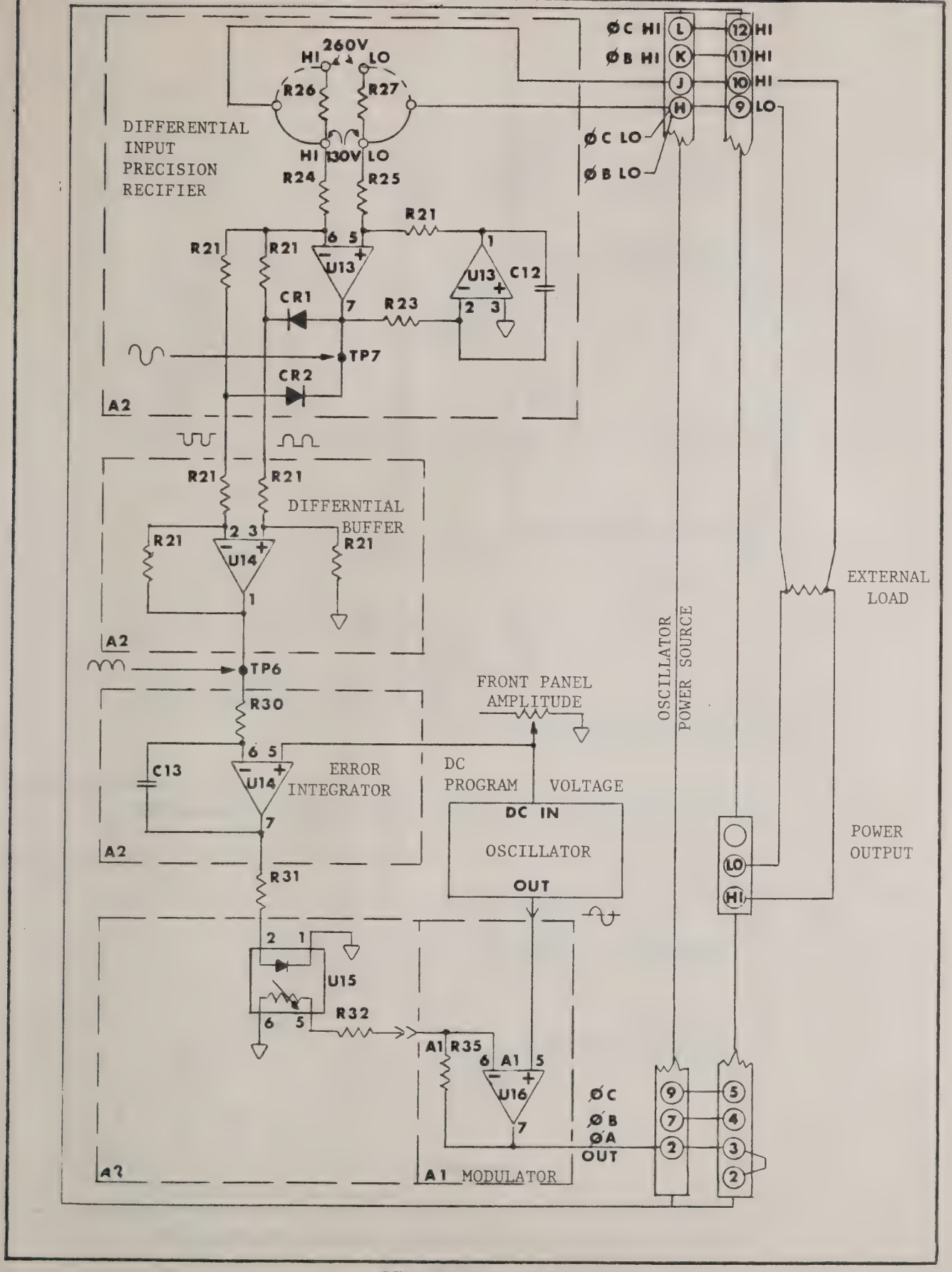

SERVO CONFIGURATION
FIGURE 5

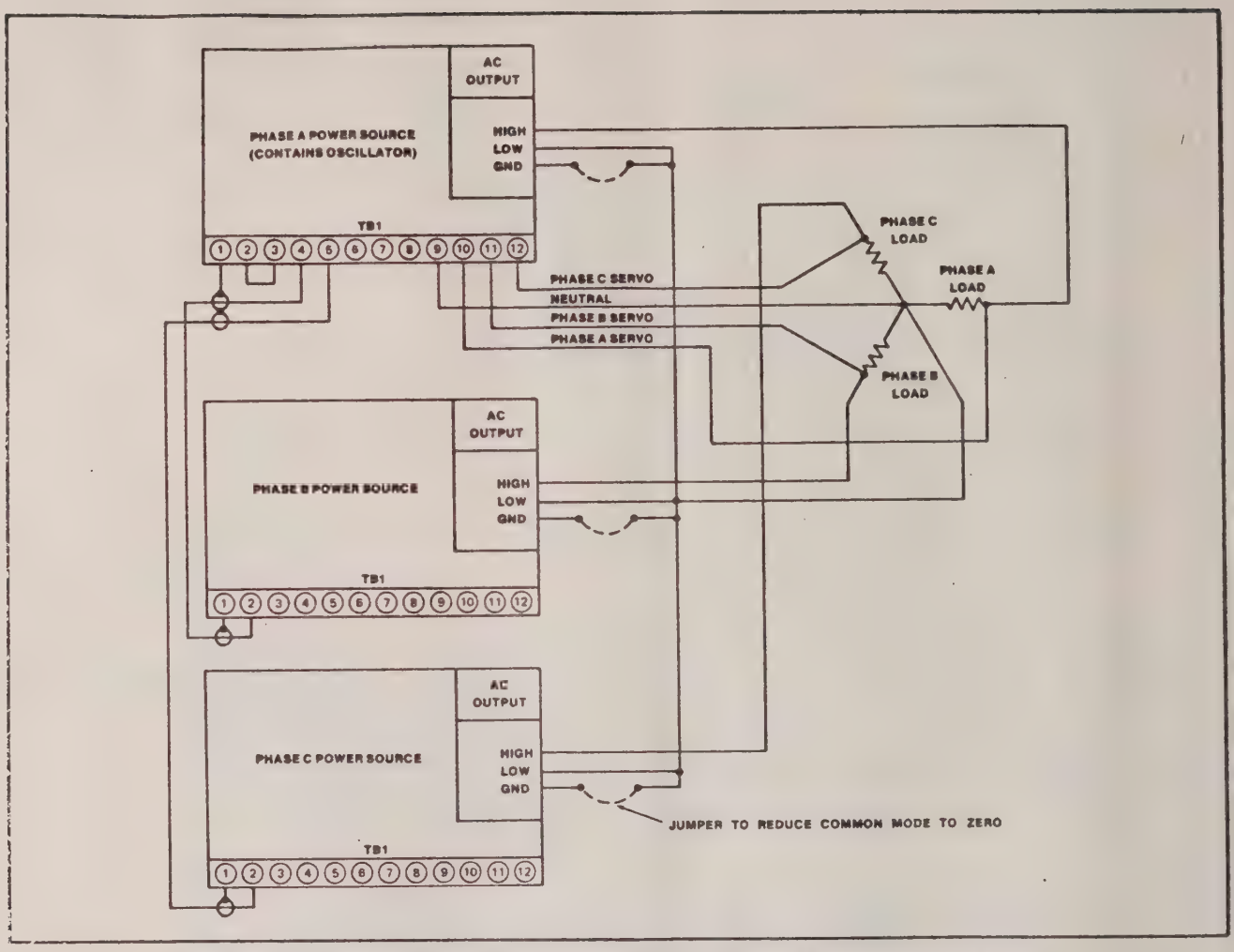

Figure 6 A Polyphase Power Source System Connections Using Individual Units.

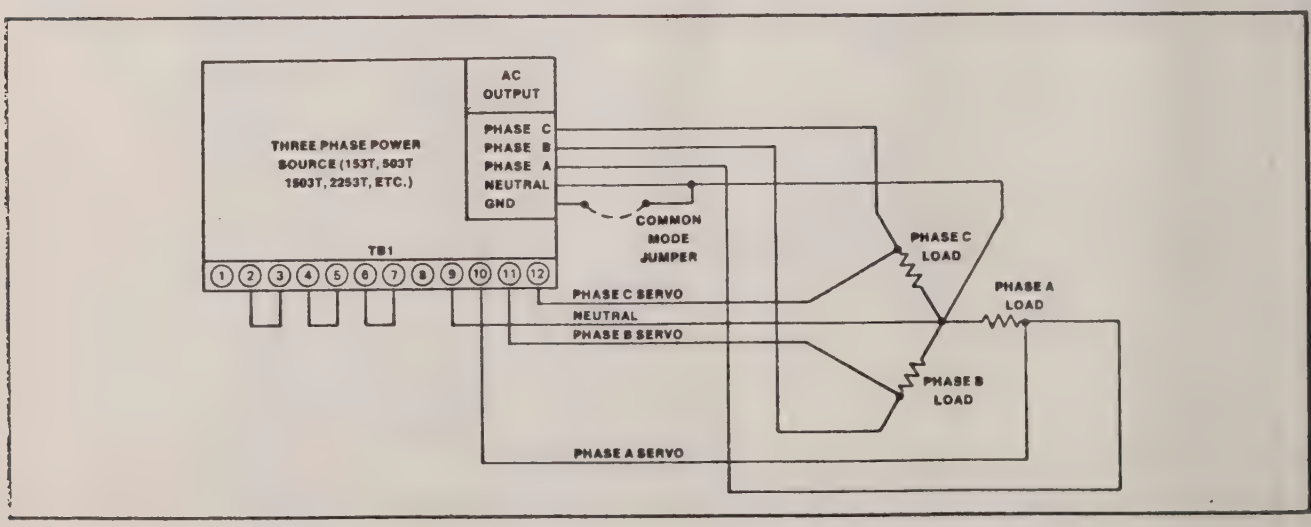

Figure 6 B Polyphase Power Source System Connections Using Single Unit.

5.2 THEORY OF OPERATION

The operation of the Phase A servo is shown in Figure 5. The operation of the Phase Band C servoes is identical to that of Phase A. The output amplitude of the power system is set by the oscillator front panel AMPLITUDE adjustment. This DC voltage is sent to the oscillator which generates a sinewave with an amplitude proportional to the DC program voltage. The oscillator output is routed through the MODULATOR and then to the power source which amplifies the signal to the appropriate level. The amplitude of the voltage is sensed across the load by differential input of the PRECISION RECTIFIER. The two half-wave outputs of the PRECISION RECTIFIER are changed to positive full wave by the DIFFERENTIAL BUFFER. The DIFFERENTIAL BUFFER output at TP6 is a voltage with a DC component proportional to the voltage sensed across the load. The DC component of this voltage is compared with the DC program voltage at the input of the ERROR INTEGRATOR. The ERROR INTEGRATOR output drives the MODULATOR to increase or decrease the drive to the power source to keep the DC component of the sense voltage equal to the DC program voltage.

5.3 SERVO CALIBRATION

5.3.1 With the servo inputs disconnected, adjust the distortion and amplitude controls identical to the procedure for an unservoed oscillator.

5.3.2 Short the common mode voltage by shorting the servo neutral input to analog common. (short TB1-1 to TB1-9)

5.3.3 Set the oscillator front panel AMPLITUDE adjustment to its maximum clockwise position. Increase the front panel GAIN control of each power source until the output of each phase is full scale +10%. (ex: 148V for 135 volt range)

5.3.4 Close the servo loop of each phase by connecting the servo inputs (Pins 9,10,11,12 of TB1) across the load. See Figure 6. Adjust the full scale pot of each to the full scale voltage. See Table 1.

5.3.5 Remove the common mode short added in Step 5.3.2 . TB1-10,11 and 12 are the Phase A, B and C servo sense HI inputs respectively. Alternately short each servo sense HI input and adjust the common mode pot of each phase to the full scale values recorded in Step 5.3.4 .

PHASE	STEP 5.3.3 OPEN SERVO ADJUSTMENT	STEP 5.3.4 FULL SCALE ADJUSTMENT	STEP 5.3.5 COMMON MODE ADJUSTMENT
A	PHASE A SOURCE GAIN CONTROL	A2 R20	A2 R22
B	PHASE B SOURCE GAIN CONTROL	A2 R33	A2 R35
C	PHASE C SOURCE GAIN CONTROL	A2 R46	A2 R48

TABLE 1

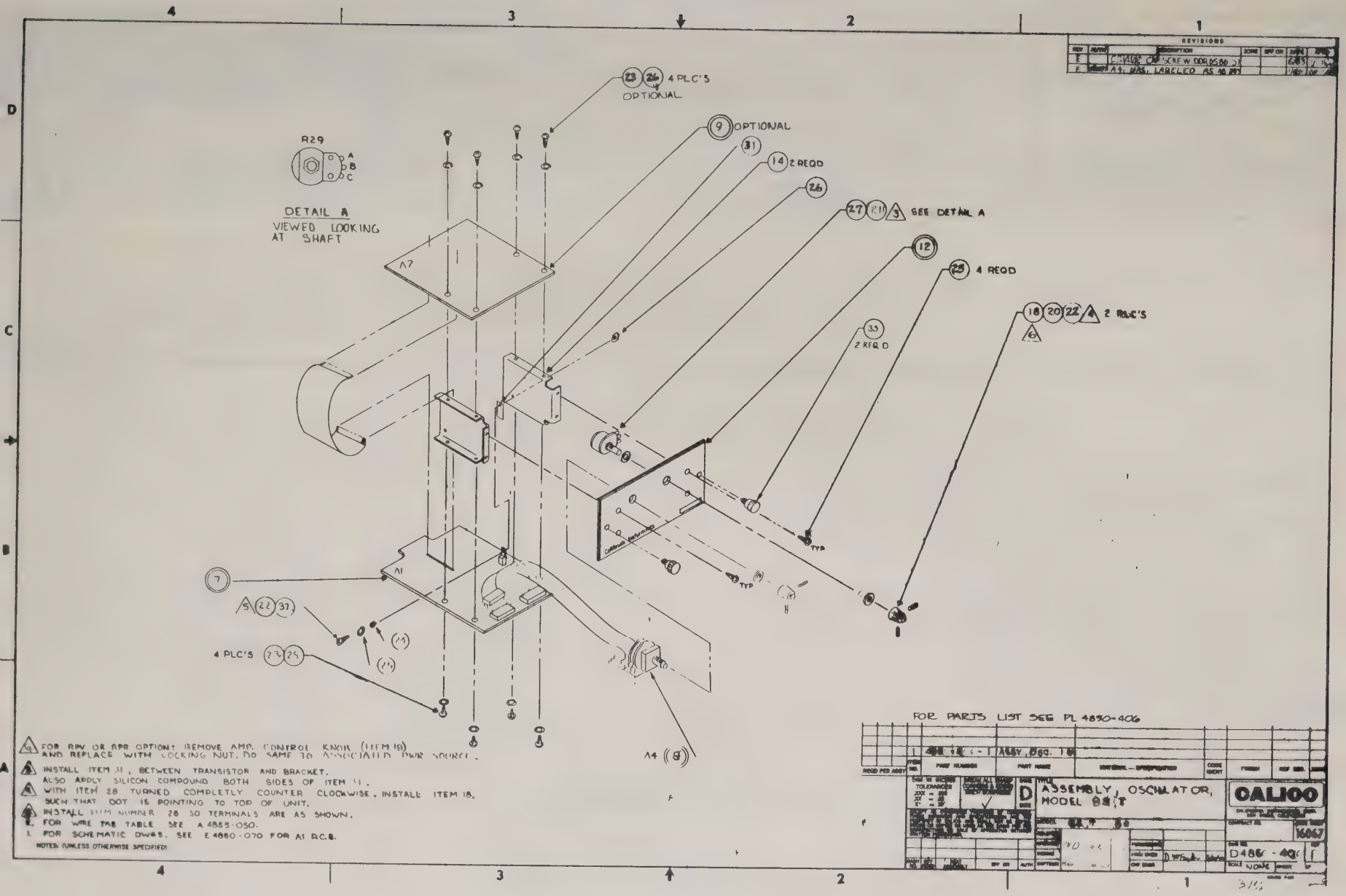

FOR RPV OR RPR OPTION: REMOVE AMP. CONTROL KNOB (ITEM 19) AND REPLACE WITH LOCKING NUT. DO SAME TO ASSOCIATED PWR SOURCE.

INSTALL ITEM 31, BETWEEN TRANSISTOR AND BRACKET. ALSO APPLY SILICON COMPOUND BOTH SIDES OF ITEM 31.

WITH ITEM 28 TURNED COMPLETLY COUNTER CLOCKWISE, INSTALL ITEM 18, SUCH THAT DOT IS POINTING TO TOP OF UNIT.

INSTALL ITEM NUMBER 28 SO TERMINALS ARE AS SHOWN.

FOR WIRE TAB TABLE SEE A 4855-050.

FOR SCHEMATIC DWGS. SEE E 4850-070 FOR A1 P.C.B.

NOTES: (UNLESS OTHERWISE SPECIFIED)

853T
50/60/400HZ

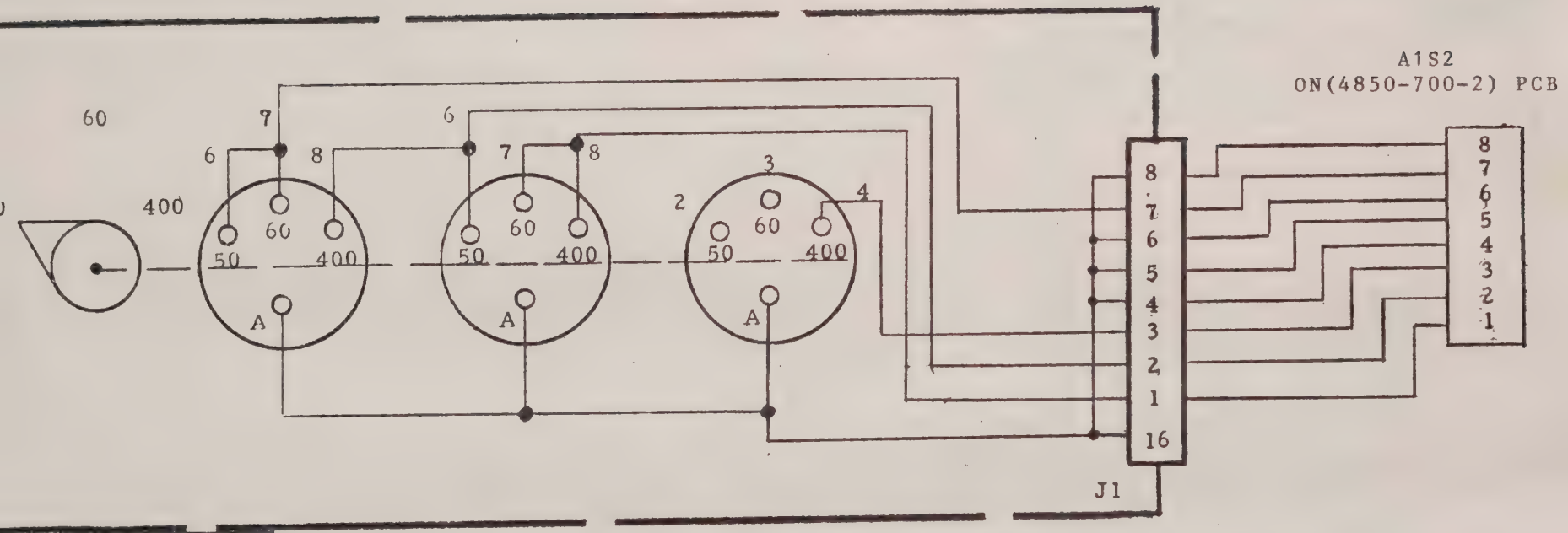

4850-705-1 | A4

DIM IN INCHES TOLERANCES	BREAK ALL SHARP CORNERS & EDGES	DWG SIZE
.XXX = .010 .XX = .03 X° = 30′	MACH SURFACES ✓	B

TITLE FREQUENCY SELECT-SCHEMATIC DIAGRAM

CALICO
CALIFORNIA INSTRUMENTS CORP.
SAN DIEGO, CALIFORNIA

EXCEPT AS OTHERWISE PROVIDED BY CONTRACT, THESE DRAWINGS AND SPECIFICATIONS ARE THE PROPERTY OF CALICO. AND SHALL NOT BE REPRODUCED OR COPIED OR USED AS THE BASIS FOR THE MANUFACTURE OR SALE OF APPARATUS WITHOUT WRITTEN PERMISSION.

MODEL 853T					
RELEASE					
CHECKER	W Drechek	12/79	PURCHASING		
DESIGN			PROJ ENGR	D. McFadden	12/79
DRFTSMN	M SANCHEZ	11-29-79	CHF ENGR		

CONTRACT NO.

CODE IDENT 16067

DWG NO. 4850-076

REV —

SCALE NONE

SHEET 1 OF 1

4850-705 | —

REVISIONS						
REV	AUTH	DESCRIPTION	ZONE	EFF ON	DATE	APRD

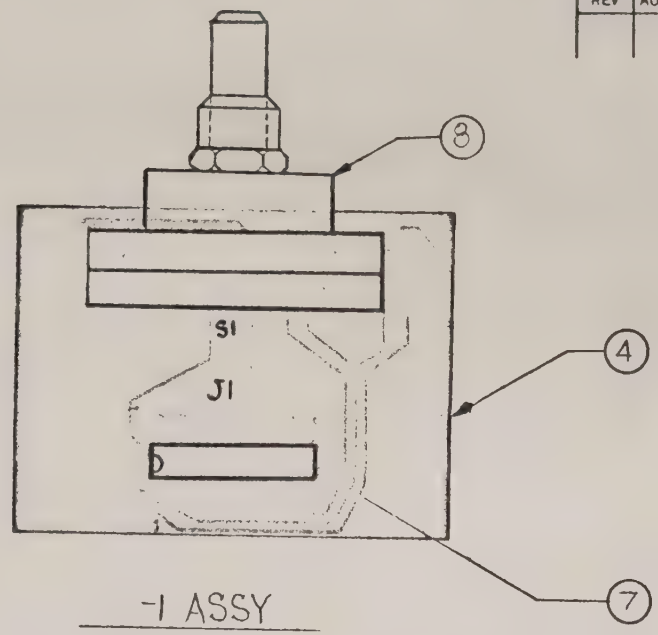

-1 ASSY

REQD PER ASSY	ITEM NO.	PART NUMBER	PART NAME	MATERIAL — SPECIFICATION	CODE IDENT	FINISH	REF DES.	ZONE

DIM IN INCHES
TOLERANCES
.XXX = .010
.XX = .03
X° = 30'

BREAK ALL SHARP CORNERS & EDGES
MACH SURFACES ✓

DWG SIZE B

TITLE FREQUENCY SELECT-
P.C. BOARD ASSEMBLY . . .

MODEL 853T

EXCEPT AS OTHERWISE PROVIDED BY CONTRACT, THESE DRAWINGS AND SPECIFICATIONS ARE THE PROPERTY OF CALICO, AND SHALL NOT BE REPRODUCED OR COPIED OR USED AS THE BASIS FOR THE MANUFACTURE OR SALE OF APPARATUS WITHOUT WRITTEN PERMISSION.

DASH NO	QTY REQD	NEXT ASSEMBLY	EFF ON	AUTH

RELEASE				
CHECKER	[illegible]	12/9	PURCHASING	
DESIGN			PROJ ENGR	D. M. Fox 12/79
DRFTSMN	M. SANCHEZ	11-13-79	CHF ENGR	

CALICO
CALIFORNIA INSTRUMENTS CORP.
SAN DIEGO, CALIFORNIA

CONTRACT NO.

CODE IDENT 16067

DWG NO. 4850-705

REV —

SCALE 2/1

SHEET 2 OF 4

1. CLAD SHOWN IS FAR SIDE.

NOTES: (UNLESS OTHERWISE SPECIFIED)

CALICO F-101

PARENT ITEM NO. 4850-406-1 | DESCRIPTION TOP ASSY,853T-50/60/400HZ | ENGR DRAW 4850-406 REV E1 | PAGE 1

SEQ NO.	COMPONENT ITEM NO.	DESCRIPTION TRUNCATED	ENGINEERING DRAWING NUMBER	VENDOR	QTY	UM
A1	4850-700-3	PC ASSY,OSCILLATOR	4850-700 REV N3	16067	1.0	EA
A4	4850-705-1	PC ASSY,50/60/400HZ	4850-705 REV 0	16067	1.0	EA
R29	570128	POT,PNL,10K,1/2W,PREC	B4010-012-1	16067	1.0	EA
12	110738-1	PANEL,FRONT W/4850-106	4850-208-1	16067	1.0	EA
14	110699	FRAME,PLUG-IN	4850-201-7	16067	2.0	EA
16	410275	CABLE ASSY,RIBBON,4"	5242-004	08261	1.0	EA
18	210191	KNOB,BLK,IND	PS-70D-2-BLK	21604	2.0	EA
20	210187	NUT,HEX,NKL,3/8-32	1199	83330	2.0	EA
22	FS1013	SCREW,PNH,S/S,4-40X3/8	MS51597-15	81349	1.0	EA
23	FS1083	SCREW,CTG,PNH,CAD,# X3/8	# X3/8 TYPE B	81349	9.0	EA
24	210076	INSULATOR,SHLDR,NYL,#4	NY04-040	08289	1.0	EA
25	FS1072	WASHER,SPLT,S/S,#4	MS35338-135	81349	5.0	EA
26	FS1066	NUT,HEX,S/S,4-40	MS35649-244	81349	1.0	EA
31	210474	INSULATOR,RECT,MICA	4673	91833	1.0	EA
32	FS4001	THERMAL COMPOUND	THERMALCOTE	13103	.1	OZ
33	240325	FSTNR,CAPTIVE SCREW	51-28-506-24	94222	2.0	EA

California Instruments

CODE IDENT 16067

PARTS LIST

REF. DES.	MFG. NUMBER	DESCRIPTION	CODE IDENT	CALICO STOCK NUMBER	ITEM NO.
	4850-410-1	RPR OPTION			1
	4850-410-2	SQUARE WAVE OPTION			2
	4850-410-3	RPR/SQUARE WAVE OPTION			3
----------	DELETE FOR	4850-700 (A1) PCB ----------			4
C19	CM05F251J03	CAPACITOR 250pF 500V	02799	6-102620	5
C20	CMO5F821J03	CAPACITOR 820pF 500V	02799	6-10050	6
R21	RC07GF103J	RESISTOR .10K 1/4W 5%	81349	5-10076	7
R26	RN55D4531F	RESISTOR 4.53K 1%	81349	5-60748	8
R28	RC07GF472J	RESISTOR 4.7K 1/4W 5%	81349	5-10068	9
U12	LM741EN	OP-AMP	27014	3-60237	10
U17	4850-011, RED	IC-PROM 256x4 16PIN	16067	3-60109	11
U19	4850-010, BRN	IC-PROM 256x4 16PIN	16067	3-60109	12
----------	DELETE FOR	4850-702 (A2) PCB (IF REQUIRED) ----------			13
C8	CMO5F821J03	CAPACITOR 820pF 500V	81349	6-10050	14
C9	CMO5F251J03	CAPACITOR 250pF 500V	81349	6-10620	15
R4	RN55C4751F	RESISTOR 4.74K 1/8W 1%	81349	5-60752	16
R5	RC07GF472J	RESISTOR 4.7K 1/4W 5%	81349	5-1068	17
U4	4850-011, RED	IC-PROM 256x4 16PIN	16067	3-60109	18
U5	4850-010, BRN	IC-PROM 256x4 16PIN	16067	3-60109	19
					20
----------	ADD TO 4850-700 (A1) PCB ----------				21
R42	RN60E604F	RESISTOR 60.4K 1/8W 1%	81349	5-60492	22
R43	RC07GF472J	RESISTOR 4.7K 1/4W 5%	81349	5-10068	23
R44	RN55D4531F	RESISTOR 4.53K 1%	81349	5-60748	24
U12	LF356N	I.C.	27014	3-60217	25
	C19, C20, R26, R28, U17, U19 NOT USED				26
					27
----------	ADD TO 4850-702 (A2) PCB (IF REQUIRED) ----------				28
R71	RN55C4751F	RESISTOR 4.75K 1/8W 1%	81349	5-60752	29
R72	RC07GF472J	RESISTOR 4.7K 1/4W 5%	81349	5-10068	30
	C8, C9, R4, R5, U4, U5, NOT USED				31
					32
					33
					34
					35
					36

MODEL 850T/855T/853T CALICO P/N 4850-410 ASSY R.D.

TITLE ADD / DELETE PARTS LIST SHT OF

PARENT ITEM NO. 4850-700-3 DESCRIPTION PC ASSY,OSCILLATOR ENGR DRAW 4850-700 REV N4

SEQ NO.	COMPONENT ITEM NO.	DESCRIPTION TRUNCATED	ENGINEERING DRAWING NUMBER	VENDOR	QTY	UM
CR1	310173	DIODE,ZNR,16V,.5W,5%	1N5246B	04713	1.0	EA
CR2	310173	DIODE,ZNR,16V,.5W,5%	1N5246B	04713	1.0	EA
CR3	310062	DIODE,RECT,1A,400V,D041	1N4004	04713	1.0	EA
CR4	310062	DIODE,RECT,1A,400V,D041	1N4004	04713	1.0	EA
CR6	310227	DIODE,SWNG,75V,.5W,D035	1N4148	07263	1.0	EA
CR7	310227	DIODE,SWNG,75V,.5W,D035	1N4148	07263	1.0	EA
C5	610094	CAP,CER,.01UF,50V	CK103	71590	1.0	EA
C6	610094	CAP,CER,.01UF,50V	CK103	71590	1.0	EA
C7	610918	CAP,VAR,.8-8.5PF	TP9G	16736	1.0	EA
C8	610015	CAP,MICA,50PF,500V	DM15-500J	72136	1.0	EA
C9	610004	CAP,MICA,10PF,500V	CM05C100J03	81349	1.0	EA
C10	610027	CAP,MICA,100PF,500V	CM05F101J03	81349	1.0	EA
C11	610008	CAP,MICA,20PF,500V	CM05E200J03	81349	1.0	EA
C15	610802	CAP,TANT,4.7UF,25V	T362B475M025AS	05397	1.0	EA
C16	610916	CAP,MYLAR,.1UF,250V	C280AE/A100K	80031	1.0	EA
C17	610916	CAP,MYLAR,.1UF,250V	C280AE/A100K	80031	1.0	EA
C19	610620	CAP,MICA,250PF,500V	CM05F251J03	81349	1.0	EA
C20	610050	CAP,MICA,820PF,300V	CM05F821J03	81349	1.0	EA
C21	611056	CAP,AL,3300UF,15V	15T3300	30039	1.0	EA
C22	610094	CAP,CER,.01UF,50V	CK103	71590	1.0	EA
C23	610094	CAP,CER,.01UF,50V	CK103	71590	1.0	EA
C24	610094	CAP,CER,.01UF,50V	CK103	71590	1.0	EA
C25	610094	CAP,CER,.01UF,50V	CK103	71590	1.0	EA
C26	610094	CAP,CER,.01UF,50V	CK103	71590	1.0	EA
L1	590065	INDUCTOR,RF,200UH	1537-90	99800	1.0	EA
Q3	330245	TRANSISTOR,FET,N,JFET	2N5245	81349	1.0	EA
Q4	330289	TRANSISTOR,SS,PNP,TO92	PE8550	07263	1.0	EA
Q5	330289	TRANSISTOR,SS,NPN,TO92	PE8050	07263	1.0	EA
Q7	330308	TRANSISTOR,FET,N,DMOS	CIC376	16067	1.0	EA
Q8	330284	TRANSISTOR,SS,NPN,TO92	PN2222A	07263	1.0	EA
R7	360241	RES,ARRAY,DIP,10K	893-1-R10K-F	73138	1.0	EA
R8	510076	RES,CARB,1/4W,10K OHM	RC07GF103J	81349	1.0	EA
R10	510100	RES,CARB,1/4W,100K OHM	RC07GF104J	81349	1.0	EA
R11	510068	RES,CARB,1/4W,4.7K OHM	RC07GF472J	81349	1.0	EA
R12	510053	RES,CARB,1/4W,1K OHM	RC07GF102J	81349	1.0	EA
R14	530004	RES,CARB,1W,68 OHM	RC32GF680J	81349	1.0	EA
R15	510053	RES,CARB,1/4W,1K OHM	RC07GF102J	81349	1.0	EA
R16	530068	RES,CARB,1W,47 OHM	RC32GF470J	81349	1.0	EA
R17	510053	RES,CARB,1/4W,1K OHM	RC07GF102J	81349	1.0	EA
R18	560575	RES,FILM,1/8W,33.2K,1%	RN55D3322F	81349	1.0	EA
R19	560747	RES,FILM,1/8W,8.06K,1%	RN55D8061F	81349	1.0	EA
R20	510100	RES,CARB,1/4W,100K OHM	RC07GF104J	81349	1.0	EA
R21	510076	RES,CARB,1/4W,10K OHM	RC07GF103J	81349	1.0	EA
R22	510100	RES,CARB,1/4W,100K OHM	RC07GF104J	81349	1.0	EA
R23	510029	RES,CARB,1/4W,100 OHM	RC07GF101J	81349	1.0	EA
R24	570265	POT,1T,PC,100K	63P104	02111	1.0	EA
R25	570256	POT,1T,PC,500 OHM	63P501	02111	1.0	EA
R26	560748	RES,FILM,1/8W,4.53K,1%	RN55D4531F	81349	1.0	EA
R27	360232	RES,ARRAY,TFLM,DIP,6.8K	893-3-R6.8K-F	73138	1.0	EA

SEQ NO.	COMPONENT ITEM NO.	DESCRIPTION TRUNCATED	ENGINEERING DRAWING NUMBER	VENDOR	QTY	UM
R28	510068	RES,CARB,1/4W,4.7K OHM	RC07GF472J	81349	1.0	EA
R32	510084	RES,CARB,1/4W,22K OHM	RC07GF223J	81349	1.0	EA
R33	360154	RES,ARRAY,SIP,22K	1094223	01121	1.0	EA
R34	360261	RES,ARRAY,DIP,22 OHM	898-3-R22	73138	1.0	EA
R35	510064	RES,CARB,1/4W,3.3K OHM	RC07GF332J	81349	1.0	EA
R36	510005	RES,CARB,1/4W,10 OHM	RC07GF100J	81349	1.0	EA
R39	510005	RES,CARB,1/4W,10 OHM	RC07GF100J	81349	1.0	EA
R45	510053	RES,CARB,1/4W,1K OHM	RC07GF102J	81349	1.0	EA
R46	510029	RES,CARB,1/4W,100 OHM	RC07GF101J	81349	1.0	EA
TP1	250303	TERMINAL,MINIWRAP POST	T44	82893	1.0	EA
TP2	250303	TERMINAL,MINIWRAP POST	T44	82893	1.0	EA
TP3	250303	TERMINAL,MINIWRAP POST	T44	82893	1.0	EA
T1	710324	TRANSFORMER	PC16-540-1	06779	1.0	EA
U1	360233	IC,TTL,RATE MULT,BCD	SN74167N	81349	1.0	EA
U2	360233	IC,TTL,RATE MULT,BCD	SN74167N	81349	1.0	EA
U3	360233	IC,TTL,RATE MULT,BCD	SN74167N	81349	1.0	EA
U4	360233	IC,TTL,RATE MULT,BCD	SN74167N	81349	1.0	EA
U7	360159	IC,TTL,INVERT,HEX	SN74LS04N	81349	1.0	EA
U8	360235	IC,TTL,NAND,4-IN,DUAL	SN74LS20N	81349	1.0	EA
U9	360332	IC,VOLTAGE REG,+5,1A	LM340-5T	27014	1.0	EA
U10	360236	IC,VOLTAGE REG,+10,.1A	LM78L10ACE	27014	1.0	EA
U11	360226	IC,TTL,COUNTER,DEC,DUAL	SN74LS390N	81349	1.0	EA
U12	360237	IC,OP-AMP,PREC	CA3193E	18722	1.0	EA
U13	360238	IC,TTL,COUNTER,BIN,UP/DN	SN74LS169N	81349	1.0	EA
U14	360238	IC,TTL,COUNTER,BIN,UP/DN	SN74LS169N	81349	1.0	EA
U15	360213	IC,OP-AMP,FET,DUAL	LF353N	27014	1.0	EA
U16	360270	IC,OP-AMP,DUAL,GP	LM1458N	27014	1.0	EA
U17	CIC207-3	IC,TTL,PROM,256X4	CIC207-3	16067	1.0	EA
U18	360238	IC,TTL,COUNTER,BIN,UP/DN	SN74LS169N	81349	1.0	EA
U19	CIC207-2	IC,TTL,PROM,256X4	CIC207-2	16067	1.0	EA
U20	360239	IC,TTL,EXCL NOR,2-IN,OC	SN74LS266N	81349	1.0	EA
U21	360240	IC,DAC,8-BIT,.19%	DAC-08EN	18324	1.0	EA
U22	360239	IC,TTL,EXCL NOR,2-IN,OC	SN74LS266N	81349	1.0	EA
Y1	250352	CRYSTAL,10.2M,.005%	HC33U PARALLEL*	00AH	1.0	EA
7	160306	PWB,OSCILLATOR	4850-750-1	16067	1.0	EA
150	230057	SOCKET,DIP,16 PIN	ICB-103-S8-T	06776	2.0	EA
152	240294	SOCKET,XSTR,4 PIN,TO5/18	05-3308	83486	1.0	EA
154	120027	DECAL,HIGH VOLTAGE 2X.7"	DANGER	16067	1.0	EA

PARENT ITEM NO. 4850-705-1

DESCRIPTION PC ASSY,50/60/400HZ
ENGR DRAW 4850-705-1

SEQ NO.	COMPONENT ITEM NO.	DESCRIPTION TRUNCATED	ENGINEERING DRAWING NUMBER	VENDOR	QTY	UM
J1	230057	SOCKET,DIP(ICN-163-53-T)	C85-16-01	01295	1.0	EA
S1	240450	SWITCH,RTRY	1120-011-1	16067	1.0	EA
4	160323	PWB,50/60/400HZ	4850-705-7	16067	1.0	EA

Appendix A

Code	Name	City	State
0000A	Electricord	Westfield	PA
0000C	Jackson Bros.	Waddon, Surrey	GB
0000S	OPCDA	Edison	NJ
0000W	Milton Ross Co.	Southampton	PA
0000Z	Timco	Los Angeles	CA
000AC	ITAC	Santa Clara	CA
000AD	Plessey	Westlake Village	CA
000AG	La France	Philadelphia	PA
000AH	Jan Crystal	Ft. Myers	CA
000AL	Data Components, Inc.	Santa Monica	CA
000AM	Kraus & Naimer	Santa Monica	CA
000AN	Ritz Instrument Transformer Co.	Redondo Beach	CA
000AS	Switches Incorporated	Mt. View	CA
00544	Metal-Cal Div., Avery Prod. Corp.	Inglewood	CA
00779	AMP Inc.	Harrisburg	PA
00853	Sangamo Electric Co.	Pickens	SC
00866	Boe Eng. Co., Inc.	City of Industry	CA
01002	G.E. Co., Ind. & Pwr. Cap. Dept.	John St. Hudson Falls	NY
01121	Allen-Bradley Co.	Milwaukee	WI
01139	G.E. Co., Silicone Products Dept.	Waterford	NY
01295	Texas Instruments	Dallas	TX
02111	Spectrol Electronics	City of Industry	CA
02335	Fairchild Controls Corp.	Hicksville, LI	NY
02375	American Insulating Machinery Co.	Philadelphia	PA
02538	Texas Electronics Co.	Dallas	TX
02660	Amphenol Corporation	Broadview	IL
02799	Use Code #72136		
03507	General Electric Company	Syracuse	NY
03508	General Electric Company	Syracuse	NY
03797	Eldema Corporation	Compton	CA
03888	Pyrofilm Resistor Co., Inc.	Cedar Knolls	NJ
03911	Clairex Corporation	New York	NY
04009	Arrow-Hart and Hegeman Elec. Co.	Hartford	CT
04713	Motorola Semiconductor Prod., Inc.	Phoenix	AZ
04963	3-M	St. Paul	MN
05245	Corcom Inc.	Chicago	IL
05276	Pomona Electronics Co., Inc.	Pomona	CA
05397	Kemet, Union Carbide Corp.	Cleveland	OH
05820	Wakefield Engineering, Inc.	Wakefield	MA
06383	Panduit Corp.	Tinley Park	IL
06514	Stantron, Wyco Metal Products	N. Hollywood	CA
06540	Amathom Elect. Hardware	New Rochelle	NY
06665	Precision Monolithics Inc.	Santa Clara	CA
06776	Robinson Nugent, Inc.	New Albany	IN
06915	Richco Plastics, Co.	Chicago	IL
07088	Kelvin Electric Company	Van Nuys	CA
07263	Fairchild Camera and Instr. Corp.	Mt. View	CA
07387	Birtcher Corporation	Los Angeles	CA
07556	Unitrack Calabro Plastics	Upper Darby	PA
07633	Epoxy Prod. Co., Allied Prod. Corp.	New Haven	CT
07716	IRC Incorporated	Burrington	IA
08065	Accurate Rubber and Plastics Co.	San Diego	CA
08261	Spectra Strip	Garden Grove	CA
08289	Blinn-Delbert Co., Inc.	Pomona	CA
08353	Bristol Co.	Toronto	CANADA
08524	Deutsch Fastener Corp.	Los Angeles	CA
08730	Vemaline Products Co.	Franklin Lakes	NJ
08779	Signal Transformer Co.	Brooklyn	NY
09353	C and K Components	Newton	MA
10389	Chicago Switch Inc.	Chicago	IL
11815	Cherry Rivet Div., Townsend Co.	Santa Ana	CA
12406	Elpac, Incorporated	Fullerton	CA
12697	Clarostat Mfg. Co., Incorporated	Dover	NH
13103	Thermalloy Company	Dallas	TX
14099	Semtech Corporation	Newbury Park	CA
14604	Elmwood Sensors Inc.	Cranston	RI
14655	Cornell-Dubilier Elect. Corp.	Newark	NJ
14726	Hollingsworth Co.	Phoenixville	PA
14752	Electro Cube, Incorporated	San Gabriel	CA
15238	ITT Semiconductors	Lawrence	MA
15636	Elec-trol	Northridge	CA
15801	Fenwall Electronics	Framingham	MA
15818	Amelco Teledyne, Incorporated	Mt. View	CA
15912	Ansley	Los Angeles	CA
16067	California Instruments Company	San Diego	CA
16758	Delco Radio Div., General Motors	Kokomo	IN
16956	Dennison	Framingham	MS
18076	Umpco	City of Industry	CA
18178	Vactec, Inc.	Maryland Heights	Mo
18324	Signetics	Sunnyvale	CA
18612	Vishay Instruments Inc.	Malvern	PA
18677	Scambe Mfg. Co.	Monterey Park	CA
18722	RCA	Mountaintop	PA
18736	Voltronics Corp.	Hanover	NJ
19080	The Robinson Company	Hawthorne	CA
21604	Buckeye Stamping Company	Columbus	OH
22599	Elastic Stop Nut Corporation	Van Nuys	CA
23050	Product Components Corp.	Hastings-on-Hudson	NY
23936	Pamotor, Incorporated	San Francisco	CA
24011	ECC	Burlington	MA
24444	General Semiconductor Industries Inc.	Tempe	AZ
24796	Parelco Inc.	Paramount	CA
25497	Meter Master	Los Angeles	CA
26806	American Zettler, Inc.	Costa Mesa	CA
27014	National Semi-Conductor Corp.	Santa Clara	CA
27191	Cutler-Hammer, Inc.	Milwaukee	WI
27264	Molex	Downers Grove	IL
27556	IMB Electronic Products	Santa Fe Springs	CA
27683	Varo, Incorporated	Ft. Garland	TX
27832	Hughes Aircraft	Newport Beach	CA

Code	Name	City	State
28480	Hewlett-Packard Co.	Palo Alto	CA
28520	Heyman Mfg. Company (Heyco)	Kenilworth	NJ
30039	International Components Corp.	Asbury Park	NJ
30983	Electra/Midland (Mepco/Electra)	San Diego	CA
30161	Aavid Engineering Inc.	Laconia	NH
30897	Dorann Company	Sylmar	CA
31951	Tridge Inc.	Pittsburgh	PA
32293	Intersil	Cupertino	CA
32559	Bivar, Inc.	Santa Ana	CA
33005	Jewell Electrical Instruments Inc.	Manchester	NH
33716	Kingsbacher Murray Co.	Los Angeles	CA
33855	Ducommun Inc.	Los Angeles	CA
34333	Silicon General	Westminster	CA
34649	Intel Corporation	Santa Clara	CA
44655	Ohmite Manufacturing Company	Skokie	IL
45722	Parker-Kalon	Clifton	NJ
46384	Penn. Eng. and Mfg. Corp.	Doylestown	PA
50522	Monsanto, Electronic Special Products	Cupertino	CA
51167	Aries Electronics Inc.	Frenchtown	NJ
51705	ICD/Rally	Palo Alto	CA
52072	Circuit Assembly Corp.	Costa Mesa	CA
54407	Power-One Co.	Camarillo	CA
56289	Sprague Electric Company	North Adams	MA
58474	Superior Electric Company	Bristol	CT
59730	Thomas and Betts Company	Elizabeth	NJ
63743	Ward Leonard Electric Co.	Mt. Vernon	NY
70318	Allmetal Screw Prod. Co.	Garden City	NY
70903	Belden Manufacturing Co.	Chicago	IL
71218	Bud Industries, Inc.	Willoughby	OH
71279	Cambridge Thermionic Corp.	Cambridge	MA
71400	Bussman Mfg. Div. McGraw-Edison Co.	St. Louis	MO
71450	CTS Corporation	Elkhart	IN
71468	ITT Cannon Electric Inc.	Los Angeles	CA
71590	Centralab Div. Globe-Union, Inc.	Milwaukee	WI
71707	Coto-Coil	Providence	RI
71744	Chicago Miniature Lampworks	Chicago	IL
71785	TRW Cinch	Chicago	IL
71984	Dow Corning Corp.	Midland	MI
72136	Elmenco (Electro Motive)	Willimantic	CT
72619	Dialight Corporation	Brooklyn	NY
72699	General Instruments	Newark	NJ
72982	Erie Technological Products Inc.	Erie	PA
73138	Beckman Instruments, Inc.	Fullerton	CA
73734	Federal Screw Products, Inc.	Chicago	IL
74193	Heinemann Electric Company	Trenton	NJ
74545	Harvey Hubbell, Inc.	Bridgeport	CT
74840	Illinois Condenser Co.	Chicago	IL
74970	E.F. Johnson Company	Waseca	MN
75042	TRW Electronic Components	Philadelphia	PA
75382	Kulka Electric Corporaion	Mt. Vernon	NY
75915	Littlefuse Incorporated	Des Plaines	IL
77122	United-Carr Inc., Patwin Division	Waterbury	CT
77342	Potter and Brumfield Div., AMF	E. Princeton	IN
78189	Shakeproof Div., Illinois Tool Works	Chicago	IL
78553	Tinnerman Products, Inc.	Cleveland	OH
79130	Johns-Manville Products Corp.	Chicago	IL
79136	Waldes Kohinoor Inc.	Long Island City	NY
79963	Zierick Mfg. Corporation	New Rochelle	NY
80031	Mepco/Electra	Morristown	NJ
80223	United Transformer Co.	New York	NY
80294	Bourns, Incorporated	Riverside	CA
81095	Triad Transformer Corp.	Venice	CA
81312	Winchester Electronics	Oakville	CT
81349	Military Specification or Commercial Generic Number		
81603	Raco Products Co.	Chicago	IL
82104	Standard Grigsby	Aurora	IL
82389	Switchcraft, Incorporated	Chicago	IL
82877	Rotron Manufacturing Co., Inc.	Woodstock	NY
82893	Vector Electronics Inc.	Sylmar	CA
83330	Herman H. Smith, Inc.	Brooklyn	NY
83486	Elco Tool and Screw Corp.	Rockford	IL
86684	RCA	Harrison	NJ
87034	Marco-Oak Industries	Anaheim	CA
88245	Useco Div., Litton Industries	Van Nuys	CA
90201	Mallory Capacitor Company	Indianapolis	IN
91637	Dale Electronics, Inc.	Columbus	NE
91662	Elco Corporation	Willow Grove	PA
91833	Keystone Electronics Corp.	New York	NY
92194	Alpha Wire Corporation	Elizabeth	NJ
94222	Southco, Incorporated	Lester	PA
95303	RCA	Cincinnati	OH
95987	Weckesser Company, Inc.	Chicago	IL
97525	Electronic Engineering Co.	Santa Ana	CA
98159	Rubber Teck, Incorporated	Gardena	CA
98291	Sealecto Corp.	Mamaroneck	NY
98376	Zero Mfg. Co. (West)	Burbank	CA
98978	IERC	Burbank	CA
99743	IMC	Maywood	CA
99800	Delevan Electronics Corporation	Aurora	NY

ONE YEAR WARRANTY

CALIFORNIA INSTRUMENTS, Division of Amstar Technical Products Co., Inc., warrants each instrument manufactured by them to be free from defects in material and workmanship for a period of one year from the date of shipment to the original purchaser. Excepted from this warranty are tubes, fuses, and batteries which carry the warranty of their original manufacturer where applicable. CALIFORNIA INSTRUMENTS will service, replace, or adjust any defective part or parts, free of charge, when the instrument is returned freight prepaid, and when examination reveals that the fault has not occurred because of misuse, abnormal conditions of operation, user modification, or attempted user repair. Equipment repaired beyond the effective date of warranty or when abnormal usage has occurred will be charged at applicable rates. CALIFORNIA INSTRUMENTS will submit an estimate for such charges before commencing repair, if so requested.

PROCEDURE FOR SERVICE

If a fault develops, notify CALIFORNIA INSTRUMENTS or its local representative, giving full details of the difficulty, and including the model number and serial number. On receipt of this information, service data or a Return Material Authorization (RMA) number will be given. Fill in RMA No. blank on shipping label attached opposite these instructions, pack instrument carefully to prevent transportation damage, affix label to shipping container, and ship freight prepaid to the factory. CALIFORNIA INSTRUMENTS shall not be responsible for repair of damage due to improper handling or packing. Instruments returned without RMA No., or freight collect will be refused. Instruments repaired under Warranty will be returned by prepaid surface freight. Instruments repaired outside the Warranty period will be returned freight collect, F.O.B. CALIFORNIA INSTRUMENTS, San Diego, CA. If requested, an estimate of repair charges will be made before work begins on repairs not covered by the Warranty.

DAMAGE IN TRANSIT

The instrument should be tested as soon as it is received. If it fails to operate properly, or is damaged in any way, a claim should be filed immediately with the carrier. A full report of the damage should be obtained by the claim agent, and a copy of this report should be forwarded to us. CALIFORNIA INSTRUMENTS will prepare an estimate of repair cost, and repair the instrument when authorized by the claim agent. Please include model number and serial number when referring to the instrument.

From

California Instruments

A Division of Amstar Technical Products Company, Inc.

5150 Convoy Street
San Diego, California 92111

Attn: Customer Service

RMA NO. _____

MP MASTER
MA28006